IP Office 8.1

IP500/IP500 V2 Installation

15-601042 Issue 27j - (08 May 2013)

© 2013 AVAYA All Rights Reserved.

Notice

While reasonable efforts have been made to ensure that the information in this document is complete and accurate at the time of printing, Avaya assumes no liability for any errors. Avaya reserves the right to make changes and corrections to the information in this document without the obligation to notify any person or organization of such changes.

Documentation disclaimer

"Documentation" means information published by Avaya in varying mediums which may include product information, operating instructions and performance specifications that Avaya generally makes available to users of its products. Documentation does not include marketing materials. Avaya shall not be responsible for any modifications, additions, or deletions to the original published version of documentation unless such modifications, additions, or deletions were performed by Avaya. End User agrees to indemnify and hold harmless Avaya, Avaya's agents, servants and employees against all claims, lawsuits, demands and judgments arising out of, or in connection with, subsequent modifications, additions or deletions to this documentation, to the extent made by End User.

Link disclaimer

Avaya is not responsible for the contents or reliability of any linked websites referenced within this site or documentation provided by Avaya. Avaya is not responsible for the accuracy of any information, statement or content provided on these sites and does not necessarily endorse the products, services, or information described or offered within them. Avaya does not guarantee that these links will work all the time and has no control over the availability of the linked pages.

Warranty

Avaya provides a limited warranty on its hardware and Software ("Product(s)"). Refer to your sales agreement to establish the terms of the limited warranty. In addition, Avaya's standard warranty language, as well as information regarding support for this Product while under warranty is available to Avaya customers and other parties through the Avaya Support website: http://support.avaya.com. Please note that if you acquired the Product(s) from an authorized Avaya reseller outside of the United States and Canada, the warranty is provided to you by said Avaya reseller and not by Avaya. "Software" means computer programs in object code, provided by Avaya or an Avaya Channel Partner, whether as stand-alone products or pre-installed on hardware products, and any upgrades, updates, bug fixes, or modified versions thereto.

Licenses

THE SOFTWARE LICENSE TERMS AVAILABLE ON THE AVAYA WEBSITE, HTTP://SUPPORT.AVAYA.COM/LICENSEINFO/ ARE APPLICABLE TO ANYONE WHO DOWNLOADS, USES AND/OR INSTALLS AVAYA SOFTWARE, PURCHASED FROM AVAYA INC., ANY AVAYA AFFILIATE, OR AN AUTHORIZED AVAYA RESELLER (AS APPLICABLE) UNDER A COMMERCIAL AGREEMENT WITH AVAYA OR AN AUTHORIZED AVAYA RESELLER. UNLESS OTHERWISE AGREED TO BY AVAYA IN WRITING, AVAYA DOES NOT EXTEND THIS LICENSE IF THE SOFTWARE WAS OBTAINED FROM ANYONE OTHER THAN AVAYA, AN AVAYA AFFILIATE OR AN AVAYA AUTHORIZED RESELLER; AVAYA RESERVES THE RIGHT TO TAKE LEGAL ACTION AGAINST YOU AND ANYONE ELSE USING OR SELLING THE SOFTWARE WITHOUT A LICENSE. BY INSTALLING, DOWNLOADING OR USING THE SOFTWARE, OR AUTHORIZING OTHERS TO DO SO, YOU, ON BEHALF OF YOURSELF AND THE ENTITY FOR WHOM YOU ARE INSTALLING, DOWNLOADING OR USING THE SOFTWARE (HEREINAFTER REFERRED TO INTERCHANGEABLY AS "YOU" AND "END USER"), AGREE TO THESE TERMS AND CONDITIONS AND CREATE A BINDING CONTRACT BETWEEN YOU AND AVAYA INC. OR THE APPLICABLE AVAYA AFFILIATE ("AVAYA").

Avaya grants you a license within the scope of the license types described below, with the exception of Heritage Nortel Software, for which the scope of the license is detailed below. Where the order documentation does not expressly identify a license type, the applicable license will be a Designated System License. The applicable number of licenses and units of capacity for which the license is granted will be one (1), unless a different number of licenses or units of capacity is specified in the documentation or other materials available to you.

"Designated Processor" means a single stand-alone computing device.

"Server" means a Designated Processor that hosts a software application to be accessed by multiple users.

License types

Designated System(s) License (DS). End User may install and use each copy of the Software only on a number of Designated Processors up to the number indicated in the order. Avaya may require the Designated Processor(s) to be identified in the order by type, serial number, feature key, location or other specific designation, or to be provided by End User to Avaya through electronic means established by Avaya specifically for this purpose.

Concurrent User License (CU). End User may install and use the Software on multiple Designated Processors or one or more servers, so long as only the licensed number of Units are accessing and using the Software at any given time. A "Unit" means the unit on which Avaya, at its sole discretion, bases the pricing of its licenses and can be, without limitation, an agent, port or user, an e-mail or voice mail account in the name of a person or corporate function (e.g., webmaster or helpdesk), or a directory entry in the administrative database utilized by the Software that permits one user to interface with the Software.

Units may be linked to a specific, identified Server.

Database License (DL). End User may install and use each copy of the Software on one Server or on multiple Servers provided that each of the Servers on which the Software is installed communicates with no more than a single instance of the same database.

CPU License (CP). End User may install and use each copy of the Software on a number of Servers up to the number indicated in the order provided that the performance capacity of the Server(s) does not exceed the performance capacity pecified for the Software. End User may not re-install or operate the software on Server(s) with a larger performance capacity without Avaya's prior consent and payment of an upgrade fee.

Named User License (NU). You may: (i) install and use the Software on a single Designated Processor or Server per authorized Named User (defined below); or (ii) install and use the Software on a Server so long as only authorized Named Users access and use the Software.

"Named User", means a user or device that has been expressly authorized by Avaya to access and use the Software. At Avaya's sole discretion, a "Named User" may be, without limitation, designated by name, corporate function (e.g., webmaster or helpdesk), an e-mail or voice mail account in the name of a person or corporate function, or a directory entry in the administrative database utilized by the Software that permits one user to interface with the Software.

Shrinkwrap License (SR). You may install and use the Software in accordance with the terms and conditions of the applicable license agreements, such as "shrinkwrap" or "clickthrough" license accompanying or applicable to the Software ("Shrinkwrap License").

Heritage Nortel Software
"Heritage Nortel Software" means the software that was acquired by Avaya as part of its purchase of the Nortel Enterprise Solutions Business in December 2009. The Heritage Nortel Software currently available for license from Avaya is the software contained within the list of Heritage Nortel Products located at http://support.avaya.com/licenseinfo under the link "Heritage Nortel Products". For Heritage Nortel Software, Avaya grants Customer a license to use Heritage Nortel Software provided hereunder solely to the extent of the authorized activation or authorized usage level, solely for the purpose specified in the Documentation, and solely as embedded in, for execution on, or (in the event the applicable Documentation permits installation on non-Avaya equipment) for communication with Avaya equipment. Charges for Heritage Nortel Software may be based on extent of activation or use authorized as specified in an order or invoice.

Copyright
Except where expressly stated otherwise, no use should be made of materials on this site, the Documentation, Software, or hardware provided by Avaya. All content on this site, the documentation and the Product provided by Avaya including the selection, arrangement and design of the content is owned either by Avaya or its licensors and is protected by copyright and other intellectual property laws including the sui generis rights relating to the protection of databases. You may not modify, copy, reproduce, republish, upload, post, transmit or distribute
in any way any content, in whole or in part, including any code and software unless expressly authorized by Avaya. Unauthorized reproduction, transmission, dissemination, storage, and or use without the express written consent of Avaya can be a criminal, as well as a civil offense under the applicable law.

Virtualization

Third Party Components
"Third Party Components" mean certain software programs or portions thereof included in the Software that may contain software (including open source software) distributed under third party agreements ("Third Party Components"), which contain terms regarding the rights to use certain portions of the Software ("Third Party Terms"). Information regarding distributed Linux OS source code (for those Products that have distributed Linux OS source code) and identifying the copyright holders of the Third Party Components and the Third Party Terms that apply is available in the Documentation or on Avaya's website at: http://support.avaya.com/Copyright. You agree to the Third Party Terms for any such Third Party Components.

Note to Service Provider
The Product may use Third Party Components that have Third Party Terms that do not allow hosting and may need to be independently licensed for such purpose.

Preventing Toll Fraud
"Toll Fraud" is the unauthorized use of your telecommunications system by an unauthorized party (for example, a person who is not a corporate employee, agent, subcontractor, or is not working on your company's behalf). Be aware that there can be a risk of Toll Fraud associated with your system and that, if Toll Fraud occurs, it can result in substantial additional charges for your telecommunications services.

Avaya Toll Fraud Intervention
If you suspect that you are being victimized by Toll Fraud and you need technical assistance or support, call Technical Service Center Toll Fraud Intervention Hotline at +1-800-643-2353 for the United States and Canada. For additional support telephone numbers, see the Avaya Support website: http://support.avaya.com. Suspected security vulnerabilities with Avaya products should be reported to Avaya by sending mail to: securityalerts@avaya.com.

Trademarks
The trademarks, logos and service marks ("Marks") displayed in this site, the Documentation and Product(s) provided by Avaya are the registered or unregistered Marks of Avaya, its affiliates, or other third parties. Users are not permitted to use such Marks without prior written consent from Avaya or such third party which may own the Mark.
Nothing contained in this site, the Documentation and Product(s) should be construed as granting, by implication, estoppel, or otherwise, any license or right in and to the Marks without the express written permission of Avaya or the applicable third party.

Avaya is a registered trademark of Avaya Inc.

All non-Avaya trademarks are the property of their respective owners, and "Linux" is a registered trademark of Linus Torvalds.

Downloading Documentation
For the most current versions of Documentation, see the Avaya Support website: http://support.avaya.com.

Contact Avaya Support
See the Avaya Support website: http://support.avaya.com for product notices and articles, or to report a problem with your Avaya product.
For a list of support telephone numbers and contact addresses, go to the Avaya Support website: http://support.avaya.com, scroll to the bottom of the page, and select Contact Avaya Support.

Contents

1. System Overview

1.1 IP Office Modes ... 13
1.1.1 Overall Capacity ... 14
1.1.2 Hardware Support Summary ... 15
1.1.3 Feature Support Summary ... 17
1.2 Control Units ... 18
1.3 IP500 V2 System Components ... 19
1.4 IP500 Office System Components ... 21
1.5 Control Unit Cards ... 23
1.5.1 IP500 Base Cards ... 23
1.5.2 IP500 Trunk Cards ... 26
1.5.3 IP400 Trunk Cards ... 27
1.5.4 Other Cards ... 28
1.6 External Expansion Modules ... 29
1.6.1 IP500 External Expansion Modules ... 32
1.6.2 IP400 External Expansion Modules ... 34
1.7 Power Supplies and Cables ... 36
1.7.1 Power Supplies ... 36
1.7.2 Power Supply Cords ... 37
1.7.3 Power Supply Backup ... 38
1.7.4 Cabling and Cables ... 39
1.7.5 Grounding ... 41
1.7.6 Lightning Protection/Out-of-Building Connections ... 42
1.8 Wall and Rack Mounting ... 43
1.9 Feature Keys and Licenses ... 45
1.10 IP Office Phones ... 46
1.11 VoIP ... 49
1.11.1 Voice Compression Channels ... 50
1.12 Supported Country Locales ... 51
1.13 IP Office Software Applications ... 52
1.14 Training ... 56
1.15 Web Sites ... 56
1.16 Emergency and Power Failure Ports ... 57

2. Installation Requirements

2.1 Environmental Requirements ... 60
2.2 Space Requirements ... 61
2.2.1 IP500 and IP500 V2 Control Units ... 62
2.2.2 External Expansion Modules ... 62
2.2.3 Wall Mounting ... 63
2.2.4 Rack Space Requirements ... 65

3. Administration Software

3.1 Administration Suite Applications ... 69
3.1.1 Installing the Admin Applications ... 69
3.1.2 Installer PC Connection ... 71
3.1.3 Starting IP Office Manager ... 72
3.1.4 Starting System Status ... 73
3.1.5 Starting Monitor ... 74

4. IP500 V2 Installation

4.1 Tools and Equipment Required ... 77
4.2 Documentation ... 78
4.3 Unpacking ... 79
4.4 SD Card Preparation ... 80
4.4.1 Upgrade the Card Firmware ... 81
4.4.2 Creating an Offline Configuration File ... 82
4.4.3 Adding a Pre-Built Configuration File ... 83
4.4.4 Adding a License File ... 83
4.4.5 Adding a 9600 Series Screen Saver File ... 83
4.4.6 Adding Music on Hold Files ... 84
4.5 IP500 Card Installation ... 85
4.5.1 IP500 Daughter Card Preparation ... 86
4.5.2 IP500 Legacy Card Preparation ... 87
4.5.3 IP500 Card Insertion ... 88
4.6 Wall Mounting ... 89
4.6.1 Wall Mounting Kit V2/V3 ... 90
4.6.2 Wall Mounting Kit V1 ... 91
4.7 Rack Mounting ... 92
4.8 Connecting External Expansion Modules ... 94
4.9 Grounding ... 96
4.10 Network Connection ... 97
4.11 Starting the System ... 98
4.11.1 Checking the LEDs ... 99
4.12 Changing the System to Standard Mode ... 101
4.12.1 Manually Changing the System to Standard Mode ... 101
4.12.2 Automating the Change to Standard Mode ... 102
4.13 Connecting Phones ... 103
4.13.1 Analog Phones ... 103
4.13.2 ETR Phones ... 103
4.13.3 DS Phones ... 103
4.13.4 TCM Phones ... 104
4.13.5 IP/SIP Phones ... 104

5. Initial Configuration Using IP Office Manager

5.1 Entering Licenses ... 107
5.2 Setting the System Locale ... 108
5.3 Changing the IP Address Settings ... 109
5.4 Changing the Default Passwords ... 110
5.5 Extension Numbering ... 112
5.6 Disable Unused Trunks ... 114
5.7 Setting the Digital Trunk Clock Source ... 116
5.8 Setting the Trunk Prefixes ... 118

6. On-Boarding

6.1 Logging In to Web Manager ... 123
6.2 On-Boarding ... 124

7. Additional Processes

7.1 Enabling IP Office Web Manager ... 127
7.2 Switching Off an IP Office System ... 128
7.3 Rebooting an IP Office System ... 130
7.4 Memory Card Removal ... 131
7.5 Memory Card Reinsertion ... 132
7.6 Changing Components ... 133
7.7 Swapping Extension Users ... 135
7.8 Upgrading the IP Office Software ... 136
7.8.1 Using the Upgrade Wizard ... 137
7.8.2 Using an SD Card ... 139
7.8.3 Upgrading 2400/5400 Phones ... 140
7.9 Out of Building Telephone Installations ... 142
7.9.1 DS Phones ... 143

7.9.2 Analog Phone Barrier Box ... 144
7.9.3 Rack Mounting Barrier Boxes ... 145
7.10 Using the External Output Port ... 146
7.10.1 Port Connection ... 146
7.11 So8 BRI Module ... 147
7.11.1 Example 1: ISDN Terminal ... 147
7.11.2 Example 2: Video Conference ... 148
7.12 SNMP ... 150
7.12.1 Installing the IP Office MIB Files ... 151
7.12.2 Enabling SNMP and Polling Support ... 153
7.12.3 Enabling SNMP Trap Sending ... 153
7.13 Reset Button ... 154
7.14 AUX Button ... 154
7.15 DTE Port Maintenance ... 155
7.15.1 DTE Port Settings ... 155
7.15.2 Erasing the Configuration ... 156
7.15.3 Defaulting Security Settings ... 158
7.15.4 Erasing the Operational Firmware ... 159

8. SD Card Management

8.1 Booting from the SD Cards ... 165
8.2 Creating an IP Office SD Card ... 167
8.3 Viewing the Card Contents ... 169
8.4 Backing Up the System SD Card ... 170
8.4.1 Backing Up the Primary Folder ... 170
8.4.2 Restore from the Backup Folder ... 171
8.4.3 Backing Up to the Optional Card ... 172
8.4.4 Restoring from the Optional Card ... 173
8.5 Upgrading Card Software ... 175
8.5.1 Upgrading Remotely Using Manager ... 176
8.5.2 Upgrading the SD Card Locally ... 176
8.5.3 Upgrading Using an Optional SD Card ... 177
8.6 Removing SD Cards ... 178
8.6.1 Card Shutdown ... 178
8.6.2 Card Startup ... 179
8.6.3 System Shutdown ... 180

9. IP500 Basic Installation

9.1 IP500 Tools Required ... 184
9.2 IP500 Read the Documentation ... 185
9.3 IP500 Unpacking ... 186
9.4 IP500 Card Installation ... 187
9.4.1 IP500 Daughter Card Preparation ... 188
9.4.2 IP500 Legacy Card Preparation ... 189
9.4.3 IP500 Card Insertion ... 190
9.5 Inserting the Feature Key ... 191
9.6 Applying Power ... 192
9.7 Check the CPU LED ... 194
9.8 Upgrading the Core Software ... 195
9.9 Receiving the Configuration ... 196
9.10 Adding Licences ... 197
9.11 Adding External Expansion Modules ... 198
9.12 Rack Mounting ... 200
9.13 Wall Mounting ... 202
9.13.1 Wall Mounting Kit V2/V3 ... 203
9.13.2 Wall Mounting Kit V1 ... 204
9.14 Grounding ... 205

10. System Components

10.1 IP500 V2 Control Unit ... 209
10.2 IP500 Control Unit ... 212
10.3 IP500 Base Cards ... 215
10.3.1 4-Port Expansion Card ... 218
10.3.2 Analog Phone ... 219
10.3.3 ATM Combination Card ... 220
10.3.4 BRI Combination Card ... 222
10.3.5 Unified Communications Module ... 223
10.3.6 Digital Station ... 225
10.3.7 ETR6 Card ... 226
10.3.8 Legacy Card Carrier ... 228
10.3.9 TCM8 Digital Station ... 229
10.3.10 VCM ... 230
10.4 IP500 Trunk Daughter Cards ... 232
10.4.1 Analog Trunk Card ... 233
10.4.2 BRI Trunk Cards ... 235
10.4.3 PRI Trunk Cards ... 236
10.5 IP500 Expansion Modules ... 237
10.5.1 Analog Trunk 16 ... 239
10.5.2 BRI So8 ... 241
10.5.3 Digital Station 16/30 ... 243
10.5.4 Digital Station 16A/30A ... 245
10.5.5 Phone 16/30 ... 248
10.6 Feature Keys ... 250
10.6.1 IP500 V2 System SD Cards ... 250
10.6.2 IP500 Smart Card ... 252
10.7 IP400 Trunk Cards ... 253
10.7.1 Analog Trunk Card Uni (ATM4U) ... 254
10.7.2 Analog Trunk Cards (ATM4) ... 255
10.7.3 BRI Trunk Cards ... 255
10.7.4 T1 PRI Trunk Cards ... 256
10.7.5 E1 PRI Trunk Cards ... 256
10.7.6 E1R2 PRI Trunk Cards ... 257
10.8 IP400 Internal Cards ... 258
10.8.1 Embedded Voicemail Memory Cards ... 258
10.8.2 Voice Compression Modules ... 259
10.9 IP400 Expansion Modules ... 260
10.9.1 Analog Trunk 16 ... 262
10.9.2 Digital Station V2 ... 264
10.9.3 Digital Station ... 266
10.9.4 Phone V2 ... 268
10.9.5 Phone ... 270
10.9.6 So8 ... 272
10.10 Mounting Kits ... 274
10.10.1 IP500 Wall Mounting Kits ... 274
10.10.2 IP500 Rack Mounting Kit ... 275
10.10.3 IP400 Rack Mounting Kit ... 275
10.10.4 Barrier Box Rack Mounting Kit ... 275
10.11 Phones ... 276
10.11.1 1010/1040 ... 279
10.11.2 1120/1140/1220/1230 ... 280
10.11.3 1403 ... 281
10.11.4 1408 ... 282
10.11.5 1416 ... 283
10.11.6 1603 ... 284
10.11.7 1608 ... 286
10.11.8 1616 ... 288
10.11.9 2402 ... 290

10.11.10 2410 ... 291
10.11.11 2420 ... 292
10.11.12 3616 ... 293
10.11.13 3620 ... 294
10.11.14 3626 ... 295
10.11.15 3641 ... 296
10.11.16 3645 ... 297
10.11.17 3701 ... 298
10.11.18 3711 ... 299
10.11.19 3720 ... 300
10.11.20 3725 ... 301
10.11.21 3740 ... 302
10.11.22 3749 ... 303
10.11.23 3810 ... 304
10.11.24 3910 ... 305
10.11.25 3920 ... 305
10.11.26 4406 ... 306
10.11.27 4412 ... 307
10.11.28 4424 ... 308
10.11.29 4601 ... 309
10.11.30 4602 ... 310
10.11.31 4610 ... 311
10.11.32 4620 ... 312
10.11.33 4621 ... 313
10.11.34 4625 ... 314
10.11.35 5402 ... 315
10.11.36 5410 ... 316
10.11.37 5420 ... 317
10.11.38 5601 ... 318
10.11.39 5602 ... 319
10.11.40 5610 ... 320
10.11.41 5620 ... 321
10.11.42 5621 ... 322
10.11.43 9504 ... 323
10.11.44 9508 ... 324
10.11.45 9608 ... 325
10.11.46 9611G ... 326
10.11.47 9620L, 9620C ... 327
10.11.48 9621G ... 329
10.11.49 9630G ... 330
10.11.50 9640, 9640G ... 332
10.11.51 9641G ... 334
10.11.52 9650, 9650C ... 335
10.11.53 Audio Conferencing Unit ... 337
10.11.54 ETR 6, ETR 6D ... 338
10.11.55 D100 Series ... 339
10.11.56 ETR 18, ETR 18D ... 340
10.11.57 ETR 34D ... 341
10.11.58 M7100 ... 342
10.11.59 M7100N ... 342
10.11.60 M7208 ... 343
10.11.61 M7208N ... 343
10.11.62 M7310 ... 344
10.11.63 M7310N ... 344
10.11.64 M7324 ... 345
10.11.65 M7324N ... 345
10.11.66 T7000 ... 346
10.11.67 T7100 ... 346
10.11.68 T7208 ... 347
10.11.69 T7316 ... 348
10.11.70 T7316E ... 349
10.11.71 T7406, T7406e ... 350
10.11.72 T3 Classic ... 351
10.11.73 T3 Comfort ... 352
10.11.74 T3 Compact ... 353
10.12 Phone Add-Ons ... 354
10.12.1 201B RIM ... 355
10.12.2 4450 ... 356
10.12.3 BM32 ... 357
10.12.4 DBM32 ... 358
10.12.5 EU24 ... 359
10.12.6 EU24BL ... 360
10.12.7 KLM Module ... 361
10.12.8 SMB24 ... 362
10.12.9 T3 DSS ... 363
10.12.10 T7316e KEM ... 364
10.12.11 XM24 ... 365
10.13 Ancilliary Systems ... 366
10.13.1 Digitial Mobility Solution ... 366
10.13.2 DECT R4 ... 367
10.14 Applications ... 368
10.14.1 IP Office Application Server ... 369
10.14.2 ContactStore ... 370
10.14.3 Customer Call Reporter ... 371
10.14.4 Manager ... 372
10.14.5 Monitor ... 373
10.14.6 one-X Portal for IP Office ... 374
10.14.7 Flare Communicator for IP Office ... 375
10.14.8 SoftConsole ... 377
10.14.9 IP Office Video SoftPhone ... 378
10.14.10 System Status Application (SSA) ... 379
10.14.11 TAPI ... 380
10.14.12 Voicemail Pro ... 381
10.14.13 Single Windows Server Support ... 383
10.14.14 IP Office Ports ... 384
10.14.15 Operating System Summary ... 387
10.15 Physical Ports ... 389
10.15.1 Cables ... 390
10.15.2 ANALOG Port ... 392
10.15.3 AUDIO Port ... 392
10.15.4 BRI Port (So) ... 393
10.15.5 BRI Port (To) ... 394
10.15.6 DC I/P Port ... 395
10.15.7 DS Ports (RJ45) ... 395
10.15.8 EF Port ... 396
10.15.9 RS232 DTE Port ... 396
10.15.10 ETR Port ... 397
10.15.11 EXPANSION Port ... 398
10.15.12 EXT O/P Port ... 398
10.15.13 LAN Port ... 399
10.15.14 PF Port ... 400
10.15.15 PHONE (POT) Port ... 401
10.15.16 PRI Port ... 403
10.15.17 TCM Port (RJ21) ... 404
10.16 Licences ... 405
10.16.1 System Edition Licenses ... 406

10.16.2 Upgrade Licenses 407
10.16.3 Trunk Licensing 408
10.16.4 Telephone/Endpoint Licenses 409
10.16.5 User Licenses 410
10.16.6 Voicemail Pro Licenses 413
10.16.7 Customer Call Reporter Licenses 416
10.16.8 Trial Licenses 418
10.16.9 Other Licenses 419
10.17 Hardware Software Compatibility 420
10.18 Hardware PCS Levels 426
10.19 TAA 426

11. Safety Statements

11.1 Lithium Batteries 428
11.2 Lightning Protection/Hazard Symbols 428
11.3 Trunk Interface Modules 429
11.4 Further Information and Product Updates 430
11.5 Port Safety Classification 430
11.6 EMC Directive 431
11.7 Regulatory Instructions for Use 432
11.7.1 Australia 432
11.7.2 Canada 432
11.7.3 China 433
11.7.4 European Union 434
11.7.5 New Zealand 434
11.7.6 FCC Notification 435
11.7.7 Compliance with FCC Rules 437
Index 439

Chapter 1.
System Overview

1. System Overview

This documentation is intended to assist with the installation of the core components of an **Avaya IP Office Essential Edition** telephone systems based on IP500 V2 hardware. It describes those components and factors that should be considered for an installation.

This documentation does not cover installation B5800 Branch Gateway or Server Edition* systems which have their own separate installation documentation.

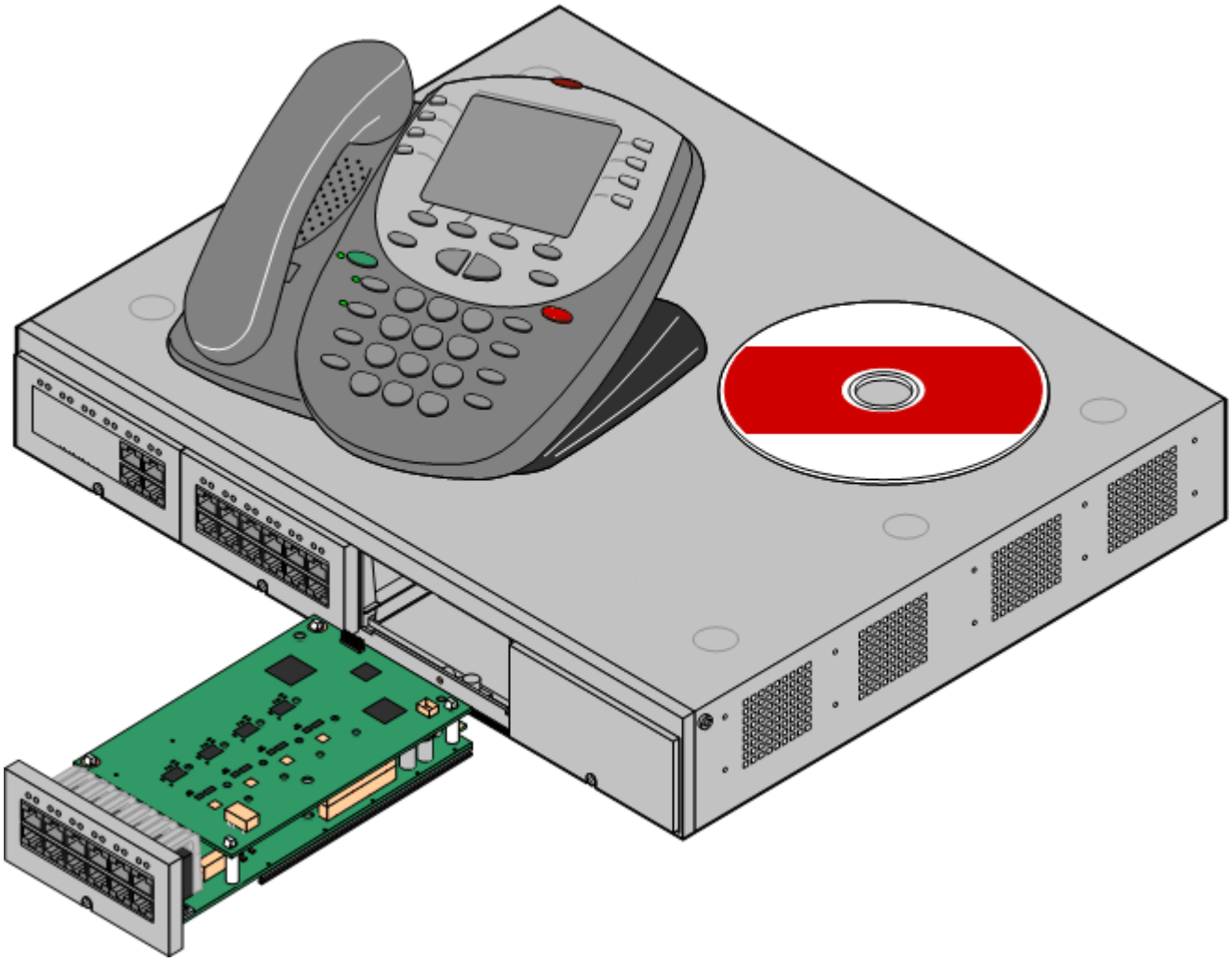

- The IP Office is a converged voice and data communications system. It should therefore only be installed by persons with telephony and IP data network experience.
- Installers must be trained on IP Office systems. Through its Avaya University 56 (AU), Avaya provides a range of training courses including specific IP Office implementation and installation training. It also provides certification schemes for installers to achieve various levels of IP Office accreditation.
- It is the installer's responsibility to ensure that all installation work is done in accordance with local and national regulations and requirements. It is also their responsibility to accurately establish the customer's requirements before installation and to ensure that the installation meets those requirements.
- You should read and understand this documentation before installation. You should also obtain and read the Avaya Technical Bulletins relevant to recent IP Office software and hardware releases to ensure that you are familiar with any changes to the IP Office equipment and software.

*The IP500 V2 units can be used for Server Edition networks as Expansion systems to provide trunk and telephone connection ports. Therefore the hardware compatibility notes for the IP500 V2 control unit in this manual remain applicable for Server Edition usage.

Additional Documentation

The following components of IP Office are outside the range of a basic IP Office installation. They are covered by separate installation and configuration documentation. If those components are to be part of the IP Office system installation, that documentation should be obtained, read and understood prior to the installation.

- **1100/1200 Series Phone Installation.**
- **one-X Portal for IP Office Installation.**
- **Avaya H323 IP Phone Installation.**
- **Embedded Voicemail Installation.**
- **Voicemail Pro Installation.**
- **Contact Store Installation.**
- **Compact DECT Installation.**
- **IP DECT R4 Installation.**
- **3600 Series Wireless IP Installation.**
- **SoftConsole Installation Manual.**
- **SIP Extension Configuration.**

- **! IP Office Technical Bulletins**
  Ensure that you have obtained and read the IP Office Technical Bulletin relating to the IP Office software release which you are installing. This bulletin will contain important information that may not have been included in this manual. IP Office Technical Bulletins are available from the Avaya support website *(http://support.avaya.com)*.

- **! Upgrade Licenses**
  Some upgrades may require entry of upgrade licenses. It is still possible to upgrade the system without the necessary licenses, however the system will not provide any telephony functions after the upgrade until the appropriate license is added to the system configuration.

Equipment Availability

SAP codes and details of specific items within this documentation are for reference only. Items available in any specific locale should be confirmed against the local Avaya IP Office price list for that locale. The local price list may also include additional items relative to the installation requirements of that locale.

This documentation covers the equipment supported by IP Office Release 8.1. That includes equipment supported but no longer available as new from Avaya.

Repair

IP Office systems do not contain any user serviceable or repairable components. If a faulty unit is suspected the whole unit should be replace. IP500 control units should not be opened under any circumstances except the insertion of an IP500 base card.

RoHS

RoHS is a European Union directive for the Removal of Certain Hazardous Substances from Electrical and Electronic Equipment. Similar legislation has been or is being introduced in a number of other countries. Avaya has decided to make its global product range compliant with the requirements of RoHS.

The actions taken vary

- In some cases equipment has been discontinued and is no longer available from Avaya.
- In some cases new manufactured stock has been made RoHS compliant and keeps its existing SAP code.
- In other cases the equipment has been replaced by a new RoHS compliant alternative with new SAP codes.
- The SAP codes within this document are for RoHS compliant equipment unless otherwise stated.

1.1 IP Office Modes

IP Office systems based on the IP500 V2 control unit can run in a number of modes:

- **IP Office Essential Edition**
  For IP Office Release 8.0, systems in this mode require an **Essential Edition** license added to the configuration. Systems without a license will not support any telephony functions. Additional licenses can then be added, including licenses for **IP Office Preferred Edition** and **IP Office Advanced Edition** operation. Throughout this document, unless stated otherwise, **IP Office Essential Edition** is used to refer to **IP Office Essential Edition**, **IP Office Preferred Edition** and **IP Office Advanced Edition**.
- **IP Office Basic Edition - Quick Mode**
  This is the default operating mode for IP500 V2 control units. The exactly behavior is determined by the type of System SD card installed in the unit, see below.
  - **IP Office Basic Edition - Norstar Mode/IP Office Basic Edition - PARTNER® Mode**
    These two modes are sold in particular locales. Functionally they are the same as IP Office Basic Edition - Quick Mode.
- **Server Edition**
  This special mode is not covered by this documentation. Refer to the separate Server Edition documentation. However, the IP500 V2 Expansion System used for Server Edition networks uses an IP500 V2 control unit. Therefore hardware compatibility notes for the IP500 V2 control unit in this manual remain applicable for Server Edition usage unless stated otherwise.
- **B5800 Branch Gateway**
  This special mode is not covered by this documentation. Refer to the separate B5800 Branch Gateway documentation.

IP500 control units run in IP Office Essential Edition only. The default mode used for IP500 V2 systems is determined by the type of System SD card present when the system is first installed. IP Office Manager can then be used to change the mode of the system.

The different System SD cards are:

- **IP Office U-Law SD Card**
  A system fitted with this type of card will default to U-Law telephony. For pre-IP Office Release 7.0 software, the system will default to IP Office standard mode. For IP Office Release 7.0+, the system will default to IP Office Basic Edition - Quick Mode ***Key System*** operation. Intended for North American locales.
- **IP Office A-Law SD Card**
  A system fitted with this type of card will default to A-Law telephony. For pre-IP Office Release 7.0 software, the system will default to IP Office standard mode. For IP Office Release 7.0+, the system will default to IP Office Basic Edition - Quick Mode ***PBX System*** operation. Intended for locales outside North America.
- **IP Office Partner Edition SD Card**
  A system fitted with this type of card will default to U-Law telephony and IP Office Basic Edition - PARTNER® Mode ***Key System*** operation. Supported only in North American locales.
- **IP Office Norstar Edition SD Card**
  A system fitted with this type of card will default to A-Law telephony and IP Office Basic Edition - Norstar Mode ***Key System*** operation. Supported only in Middle East and North African locales.

An IP500 V2 system can be converted from its current mode to run in IP Office Essential Edition using IP Office Manager. For IP Office Release 8.0 and higher, the system also requires an **Essential Edition** license to run in IP Office Essential Edition. This license is not required in any other modes.

1.1.1 Overall Capacity

The following table is a summary only. The exact combinations of extension, trunk and user ports will also depend on local variations in hardware supported.

		IP Office Basic Edition - PARTNER® Mode	IP Office Basic Edition - Norstar Mode	IP Office Basic Edition - Quick Mode	IP Office Essential Edition
Extensions	Maximum Extensions	100 [1]	100 [1]	100 [1]	384
Trunks	Maximum Trunks	64	64	64	[5]
	- Maximum Analog Trunks	32	32	32	204
	- Maximum BRI Channels [3]	–	12	12	32
	- Maximum PRI Channels [4]	24	30	30	240
	- Maximum SIP Channels [2]	20	20	20	[5]
	- Maximum H323 IP Channels	–	–	–	[5]

1. 100 Extensions in 3-digit extension numbering mode. 48 extensions in 2-digit extension numbering mode.
   - For IP Office Basic Edition - Quick Mode, IP Office Basic Edition - PARTNER® Mode and IP Office Basic Edition - Norstar Mode, the system assumes that the base control unit is always fully populated with up to 32 extensions, either real or phantom or a mix, to which it assigns extension numbers in sequence. It does this before assigning extension numbers to any real extensions on attached external expansion modules up to the system extension limit. If the system extension limit has not been exceeded, any remaining extension numbers are assigned to additional phantom extensions.
2. IP Office Basic Edition - Quick Mode, IP Office Basic Edition - PARTNER® Mode and IP Office Basic Edition - Norstar Mode systems support 3 SIP channels without licenses. Additional channels up to the limit require licenses. IP Office Essential Edition systems require licenses for all channels. In all modes, voice compression hardware resources are also required for SIP support.
3. IP Office Basic Edition - Quick Mode, IP Office Basic Edition - PARTNER® Mode and IP Office Basic Edition - Norstar Mode systems do not support both BRI and PRI trunks in the same system.IP Office Essential Edition systems support both BRI and PRI trunks in the same system. Non-IP Office Essential Edition systems are restricted to 12 BRI channels regardless of the BRI hardware installed.
4. IP Office Basic Edition - Quick Mode, IP Office Basic Edition - PARTNER® Mode and IP Office Basic Edition - Norstar Mode systems are limited to 1 single-port PRI card.
5. Capacity is dependent on licenses, voice compression resources and available bandwidth.

1.1.2 Hardware Support Summary

Note that even where indicated as supported, the availability and support of equipment may still be subject to local restrictions. The table below is a summary just for IP Office Release 8.1, refer to Hardware Software Compatibility 420 for a more historical summary and for a listing of supported telephones.

	Control Unit		IP Office Basic Edition			IP Office Essential Edition	IP Office Preferred Edition	IP Office Advanced Edition
	IP500	IP500 V2	PARTNER Mode	Norstar Mode	Quick Mode			
IP500 V2 Control Unit	–	✓	✓	✓	✓	✓	✓	✓
IP500 Control Unit	✓	–	–	–	–	✓	✓	✓
IP500 Base Cards								
IP500 Digital Station Card	✓	✓	✓ 3	✓ 3	✓ 3	✓ 3	✓ 3	✓ 3
IP500 Analog Phone 2/8	✓	✓	✓ 4	✓ 4	✓ 4	✓ 4	✓ 4	✓ 4
IP500 TCM8 Card[6]	–	✓	✓ 4	✓ 4	✓ 4	✓ 4	✓ 4	✓ 4
IP500 VCM 32/64 Cards	✓	✓	–	–	–	✓ 2	✓ 2	✓ 2
IP500 Legacy Card Carrier	✓	✓	–	–	–	✓	✓	✓
IP500 4-Port Expansion	✓	✓	–	–	–	✓ 1	✓ 1	✓ 1
IP500 BRI Combo[2][6]	–	✓	–	✓ 2	✓ 2	✓	✓	✓
IP500 ATM Combo[2][6]	–	✓	✓ 2	✓ 2	✓ 2	✓ 2	✓ 2	✓ 2
IP500 ATM Combo V2[2][6]	–	✓	✓ 2	✓ 2	✓ 2	✓ 2	✓ 2	✓ 2
IP500 ETR6[1][6]	–	✓	✓ 3	–	✓ 3	–	–	–
Unified Communications Module[6]	–	✓	–	–	–	✓	✓	✓
Trunk Daughter Cards								
Analog Trunk Card	✓	✓	✓	✓	✓	✓	✓	✓
Analog Trunk Card V2[6]	–	✓	✓	✓	✓	✓	✓	✓
BRI Trunk Cards[4]	✓	✓	–	✓	✓	✓	✓	✓
PRI Trunk Card[4][5]	✓	✓	✓ 1	✓ 1	✓ 1	✓ 4	✓ 4	✓ 4
Expansion Modules								
Number of Modules[3]			8	8	8	12	12	12
Digital Station 16/30	✓	✓	✓	✓	✓	✓	✓	✓
Digital Station 16A/30A	–	✓	✓	✓	✓	✓	✓	✓
Phone 8/16/30	✓	✓	✓	✓	✓	✓	✓	✓
Analog Trunk 16	✓	✓	✓	✓	✓	✓	✓	✓
BRI So8	✓	✓	–	–	–	✓	✓	✓
Telephone Types								
ETR Phones *(ETR ports)*	✓	✓	✓	–	✓	–	–	–
BST Phones *(TCM ports)*	✓	✓	✓	✓	✓	✓	✓	✓
DS Phones *(DS ports)*	✓	✓	✓	✓	✓	✓	✓	✓
H323 IP Phones *(LAN)*	✓	✓	–	–	–	✓	✓	✓
SIP IP Phones *(LAN)*	✓	✓	–	–	–	✓	✓	✓
DECT R4 *(LAN)*	✓	✓				✓	✓	✓
DECT DMS *(TCM ports)*	✓	✓	✓	✓	✓	✓	✓	✓
Voicemail Types								
Embedded Voicemail	✓	✓	✓	✓	✓	✓	✓	✓
Voicemail Pro	✓	✓	–	–	–	✓	✓	✓

Notes

1. The ETR6 card is only supported by IP500 V2 systems in IP Office Basic Edition - PARTNER® Mode or IP Office Basic Edition - Quick Mode U-Law modes.
2. Only 2 combinations cards are supported in a control unit, regardless of combination card type.
3. External expansion modules can be added so long as the overall limit for extensions and trunks is not exceeded. On non-IP Office Essential Edition systems, a maximum of one Analog Trunk 16 module is supported.
4. A mix of BRI and PRI trunks is not supported by IP Office Basic Edition - Norstar Mode and IP Office Basic Edition - Quick Mode.
5. IP Office Basic Edition - PARTNER® Mode, IP Office Basic Edition - Norstar Mode and IP Office Basic Edition - Quick Mode each only support a single-port PRI card.
6. Not supported by IP500. IP500 V2 only.

1.1.3 Feature Support Summary

The table below is a general summary only. For more specific details refer to the installation documentation for the specific application.

		IP Office Basic Edition			IP Office Essential Edition	IP Office Preferred Edition	IP Office Advanced Edition
		PARTNER Mode	Norstar Mode	Quick Mode			
Admin Applications	**Phone Based Admin**	✓	✓	✓	–	–	–
	IP Office Web Manager	✓	✓	✓	–	–	–
	IP Office Manager	✓	✓	✓	✓	✓	✓
	Monitor (System Monitor)	✓	✓	✓	✓	✓	✓
	System Status Application	✓	✓	✓	✓	✓	✓
IP Office Applications	**Customer Call Reporter**	–	–	–	–		✓
	one-X Portal for IP Office	–	–	–	–	✓	✓
	one-X Mobile	–	–	–	–	✓	✓
	Flare Communicator for IP Office	–	–	–	–	✓	✓
	SoftConsole	–	–	–	✓	✓	✓
	IP Office Video Softphone	–	–	–	✓	✓	✓
	TAPI (1st Party)	✓	✓	✓	✓	✓	✓
	TAPI (3rd Party)	–	–	–	✓	✓	✓
	Voicemail Pro	–	–	–	–	✓	✓
	ContactStore	–	–	–	–	✓	✓
Locales		Canada, Mexico, United States	Bahrain, Egypt, Kuwait, Morocco, Oman, Pakistan, Qatar, Saudi Arabia, South Africa, Turkey, United Arab Emirates	Argentina, Australia, Bahrain, Belgium, Brazil, Canada, Chile, China, Colombia, Denmark, Egypt, Finland, France, Germany, Greece, Hong Kong, Hungary, Iceland, India, Italy, Korea, Kuwait, Malaysia, Mexico, Morocco, Netherlands, New Zealand, Norway, Oman, Pakistan, Peru, Poland, Portugal, Qatar, Russia, Saudi Arabia, Singapore, South Africa, Spain, Sweden, Switzerland, Taiwan, Turkey, United Arab Emirates, United Kingdom, United States, Venezuela.			
Voicemail Languages	**Embedded Voicemail**	• Arabic, Chinese-Mandarin, Chinese-Cantonese, Danish, Dutch, English-UK, English-US, Finnish, French, French-Canadian, German, Italian, Korean, Norwegian, Portuguese, Portuguese Brazilian, Russian, Swedish, Spanish, Spanish-Latin, Spanish-Argentinean.					
	Voicemail Pro	–	–	–	–	As above plus: Hungarian, Greek, Polish. Minus: Arabic.	
Default Configuration Access	**User Name**	Administrator					
	Password	Administrator					
Default Upgrade Password		Administrator			password		

1.2 Control Units

The base of any IP Office system is the control unit. It stores the system configuration and controls the system operation. Each control unit can be customized by adding various base card 23 onto which trunk daughter cards 26 can also be added. External expansion modules 29 can also be connected to add additional extension and trunk ports.

IP Office Release 8.1 supports the following IP Office control units. Other previous IP Office control units are not supported by IP Office Release 8.1 and are not covered by this documentation.

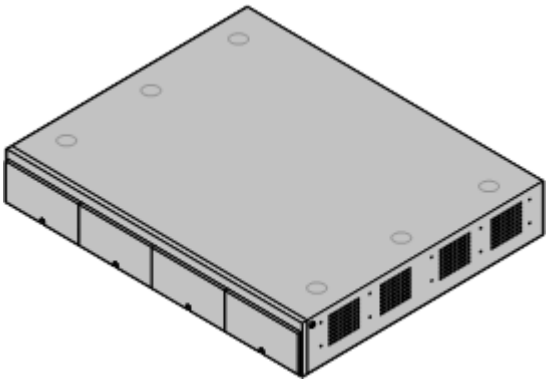

- **IP500 V2 Control Unit** 209
  This control unit has four front slots for IP500 base cards. It has an internal power supply unit and uses a mandatory System SD card Feature Key dongle. It includes a 2 port ethernet LAN switch (layer 3 managed) on the rear.
  - The type of System SD card fitted to the system determines the operation mode 13 of the system. The possible modes are:
    - **IP Office Basic Edition - PARTNER® Mode**
    - **IP Office Basic Edition - Norstar Mode**
    - **IP Office Basic Edition - Quick Mode**
    - **IP Office Essential Edition**
      For systems to operate in IP Office Essential Edition, its configuration must include an Essential Edition License or a suitable upgrade license from pre-IP Office Release 8.0. A IP Office Essential Edition system can be be licensed for two additional modes to support additional features:
      - **IP Office Preferred Edition**
      - **IP Office Advanced Edition**
    - **Server Edition**
      An IP500 V2 system can be set to operate in Server Edition mode using IP Office Manager. This is independent of the type of System SD card installed though the card is still required. Installation and configuration of Server Edition is not covered by this manual.

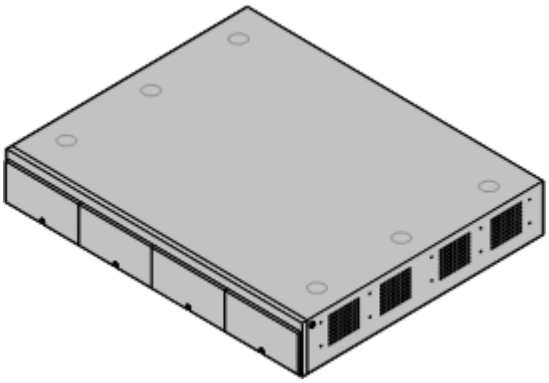

- **IP500 Control Unit** 212
  This control unit has four front slots for IP500 base cards. It has an internal power supply unit and uses a mandatory smart card Feature Key dongle. It includes a 2 port ethernet LAN switch (layer 3 managed) on the rear.

1.3 IP500 V2 System Components

The following are the typical components of an IP Office system based on an IP500 V2 control unit.

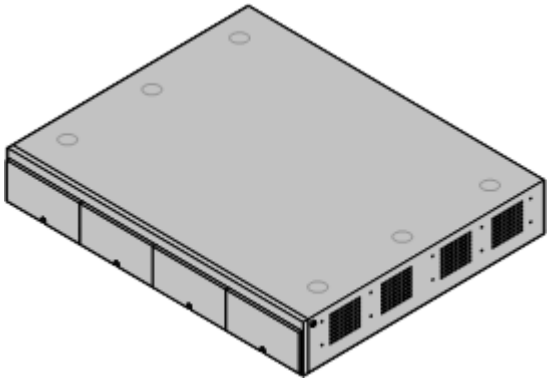

- **IP Office IP500 V2 System Unit** 209
  The control unit holds the main configuration and performs the routing and switching for telephone calls and data traffic. Each control unit includes 4 slots for optional base cards to support trunk and phone extension ports.
  - **Avaya SD Card** 45
    This uniquely numbered dongle is used to validate license keys entered into the system's configuration to enable features. A dongle is mandatory for correct system operation even if no licensed features are being used. IP500 V2 control units use an Avaya SD card which is slotted into the rear of the control unit. This card also provides Embedded Voicemail support and storage for system software files.

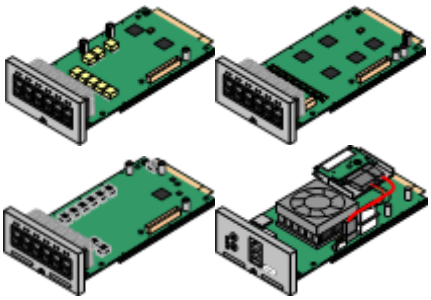

- **IP500 Base Cards** 23
  The IP500 V2 control unit has slots for up to 4 IP500 base cards. These can be used to add ports for analog extensions, digital extensions, voice compression channels and other resources.
  - **IP500 Digital Station Base Card** 225
  - **IP500 Analog Phone Base Card** 219
  - **IP500 VCM Base Card** 230
  - **IP500 Legacy Card Carrier** 228
  - **IP500 4-Port Expansion Base Card** 218
  - **IP500 TCM8 Base Card** 229
  - **IP500 ETR6 Base Card** 226
  - **Unified Communications Module** 223

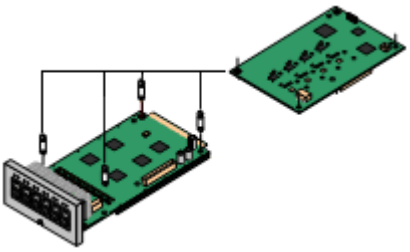

- **IP500 Trunk Daughter Cards** 26
  Many of the IP500 base cards can be fitted with an IP500 daughter card in order to support various types of trunk connections.
  - **IP500 Analog Trunk Card** 233
  - **IP500 Analog Trunk Card V2** 233
  - **IP500 BRI Trunk Card** 235
  - **IP500 PRI Trunk Card** 236

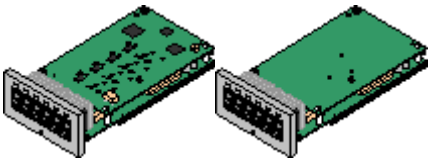

- **IP500 Combination Cards** 23
  These card are pre-paired base and daughter cards. They provide 6 digital station ports, 2 analog phone ports, 10 voice compression channels and either 4 analog trunk ports or 4 BRI channels (2 ports). The trunk daughter card cannot be removed or replaced with another type.
  - **IP500 BRI Combination Card** 222
  - **IP500 ATM Combination Card** 220
  - **IP500 ATM Combination Card V2** 220

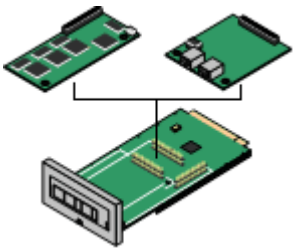

- **IP400 Cards** 27
  The IP500 Legacy Carrier base card can be used to allow IP400 trunk cards and IP400 VCM cards from previous IP400 systems to be reused in an IP500 V2 control unit.

VK00nDd15SDvXoxkw9cR9x_jOXr_AWz9

- **License Keys** 418
  Various IP Office features and applications require a license key to be entered into the system's configuration. Each key is a 32-character text string unique to the feature being activated and the serial number of the Feature Key dongle installed in the system.

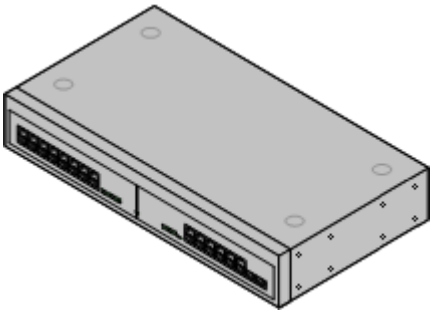

- **IP500 External Expansion Modules** 29
  Additional ports can be added using a number of IP500 external expansion modules. Support also includes IP400 external expansion modules 34.
  - Systems running in IP Office Basic Edition - PARTNER® Mode, IP Office Basic Edition - Norstar Mode or IP Office Basic Edition - Quick Mode support up to 8 external expansion modules so long as the system extensions limit is not exceeded.
  - Systems running in IP Office Essential Edition support 8 external expansion modules or 12 if the control unit is fitted with an IP500 4-Port Expansion Base Card.

- **Power Supplies** 36
  The IP500 control unit has an internal power supply unit. Each external expansion module is supplied with an external power supply unit. Additional power supply units may also be required for IP phones and some phone add-ons.

- **Power Cords** 37
  Depending on the locale, different power cords need to be ordered for each control unit, external expansion module and any phones or devices using external power supply units.

- **Cables** 39
  The IP Office is designed primarily for connection to a structured cabling system using CAT3 UTP cabling. This approach allows telephone and data traffic to share the same wiring infrastructure and simplifies equipment moves.

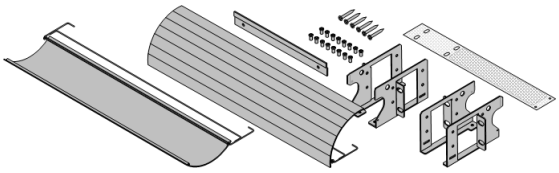

- **Mounting Kits** 43
  The control unit can be used free-standing, with external expansion modules stacked above it. With optional rack mounting kits, the control unit and external expansion modules can also be rack mounted. Alternatively with an optional wall mounting kit the IP500 control unit can be wall mounted. IP500 external expansion modules can also be wall mounted.

- **Surge Protectors and Barrier Boxes** 42
  Where the installation includes extensions in other buildings additional protective equipment is required. This equipment may also be required in areas where the lightning risk is high.

- **Phones** 46
  IP Office systems support a variety of Avaya digital and IP phones plus analog phones.

- **Application DVDs** 52
  The IP Office applications can be ordered on a number of DVDs. In addition they can be downloaded from the IP Office section of the Avaya support web site *(http://support.avaya.com)*.

1.4 IP500 Office System Components

The following are the typical components of an IP Office system based on an IP500 control unit.

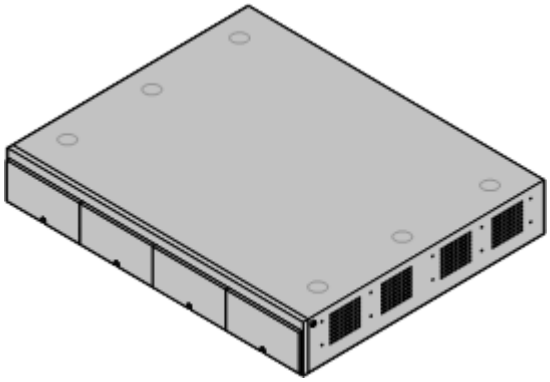

- **IP Office IP500 Control Unit** 18
  The control unit holds the main configuration and performs the routing and switching for telephone calls and data traffic. Each control unit includes 4 slots for optional base cards to support trunk and phone extension ports.

  - **Feature Key Dongle** 45
    This uniquely numbered dongle is used to validate license keys entered into the system's configuration to enable features. For IP500 control units, a dongle is mandatory for correct system operation even if no licensed features are being used. IP500 control units use a Smart Card which is slotted into the rear of the control unit.

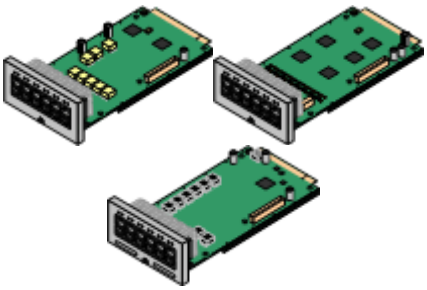

- **IP500 Base Cards** 23
  The IP500 control unit has slots for up to 4 IP500 base cards. These can be used to add ports for analog extensions, digital extensions, voice compression channels and other resources.
  - **IP500 Digital Station Base Card** 225
  - **IP500 Analog Phone Base Card** 219
  - **IP500 VCM Base Card** 230
  - **IP500 Legacy Card Carrier** 228
  - **IP500 4-Port Expansion Base Card** 218

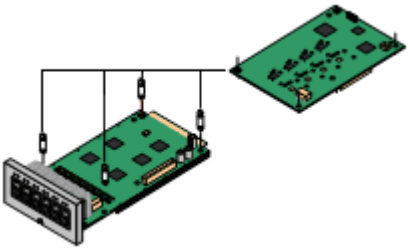

- **IP500 Trunk Daughter Cards** 26
  Many of the IP500 base cards can be fitted with an IP500 daughter card in order to support various types of trunk connections.
  - **IP500 Analog Trunk Card** 235
  - **IP500 BRI Trunk Card** 235
  - **IP500 PRI Trunk Card** 236

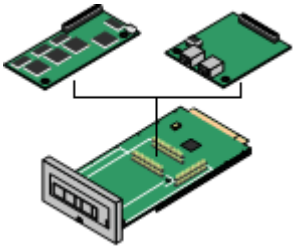

- **IP400 Cards** 27
  The IP500 Legacy Carrier base card can be used to allow IP400 trunk cards and IP400 VCM cards from previous IP400 systems to be reused in an IP500 V2 control unit.

VK00nDd15SDvXoxkw9cR9x_jOXr_AWz9

- **License Keys** 418
  Various IP Office features and applications require a license key to be entered into the system's configuration. Each key is a 32-character text string unique to the feature being activated and the serial number of the Feature Key dongle installed in the system.

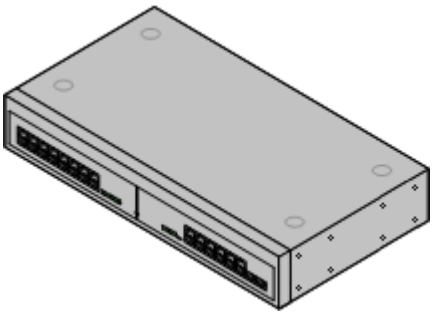

- **IP500 External Expansion Modules** 29
  Additional ports can be added using a number of IP500 external expansion modules. Support also includes IP400 external expansion modules 34. Up to 8 external expansion modules are supported or 12 if the control unit is fitted with an IP500 4-Port Expansion Base Card.

- **Power Supplies** 36
  The IP500 control unit has an internal power supply unit. Each external expansion module is supplied with an external power supply unit. Additional power supply units may also be required for IP phones and some phone add-ons.

- **Power Cords** 37
  Depending on the locale, different power cords need to be ordered for each control unit, external expansion module and any phones or devices using external power supply units.

- **Cables** 39
  The IP Office is designed primarily for connection to a structured cabling system using CAT3 UTP cabling. This approach allows telephone and data traffic to share the same wiring infrastructure and simplifies equipment moves.

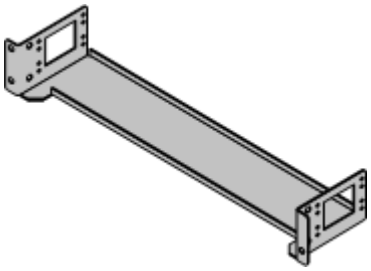

- **Mounting Kits** 43
  The control unit can be used free-standing, with external expansion modules stacked above it. With optional rack mounting kits, the control unit and external expansion modules can also be rack mounted. Alternatively with an optional wall mounting kit the IP500 control unit can be wall mounted. IP500 external expansion modules can also be wall mounted.

- **Surge Protectors and Barrier Boxes** 42
  Where the installation includes extensions in other buildings additional protective equipment is required. This equipment may also be required in areas where the lightning risk is high.

- **Phones** 46
  IP Office systems support a variety of Avaya digital and IP phones plus analog phones.

- **Application DVDs** 52
  The IP Office applications can be ordered on a number of DVDs. In addition they can be downloaded from the IP Office section of the Avaya support web site *(http://support.avaya.com)*.

- **Embedded Voicemail Memory Card** 28
  This optional card can be used to support Embedded Voicemail.

1.5 Control Unit Cards

1.5.1 IP500 Base Cards

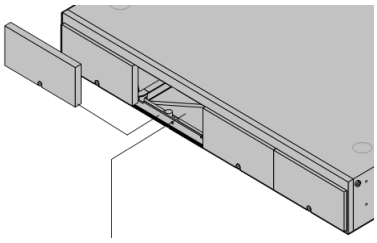

The IP500 and IP500 V2 control units have 4 slots for the insertion of IP500 base cards. The slots are numbered 1 to 4 from left to right. Normally they can be used in any order, however if the capacity for a particular type of card is exceeded, the card in the rightmost slot will be disabled.

Each base card includes an integral front panel with ports for cable connections. Typically the first 8 ports on the left are for connection of extension devices. The 4 ports on the left are used for connection of trunks if a trunk daughter card 26 is added to the base card.

IP500 Digital Station Base Card 225

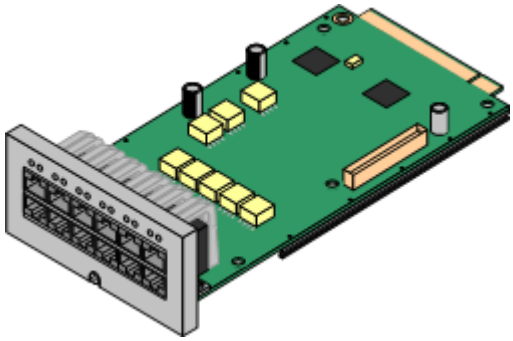

This card provides 8 DS (digital station) ports for the connection of Avaya digital phones.

- The card can be fitted with an IP500 trunk daughter card 26 which uses the base card ports for trunk connection.
- **Maximum:** 3 per control unit.
  - 4400 Series phones (4406D, 4412D and 4424D) are not supported on this card. They are supported on external expansion module DS ports.
  - Connections for 4100, 7400, M-Series and T-Series phones use the IP500 TCM8 Digital Station card.

IP500 Analog Phone Base Card 219

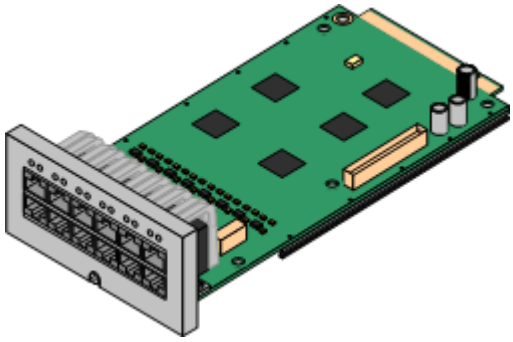

The card is available in two variants, supporting either 2 or 8 analog phone ports.

- The card can be fitted with an IP500 trunk daughter card 26 which uses the base card ports for trunk connection.
- **Maximum:** 4 per control unit.
  - The analog phone ports do not include a ringing capacitor. Where this is a requirement, connection should be via a Master socket containing ringing capacitors.
  - If fitted with an IP500 Analog Trunk daughter card, during power failure phone port 8 is connected to analog trunk port 12.

IP500 TCM8 Digital Station Card 229

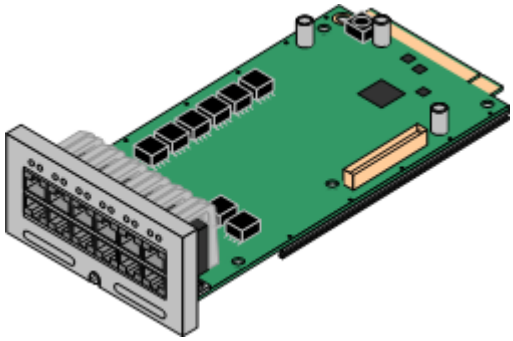

This card provides 8 TCM (digital station) ports for the connection of Avaya 4100, 7400, M-Series and T-Series phones.

- The card can be fitted with an IP500 trunk daughter card 26 which uses the base card ports for trunk connection.
- **Maximum:** 4 per control unit per IP500 V2 control unit. Not supported by IP500 control units.

IP500 VCM Base Card 230

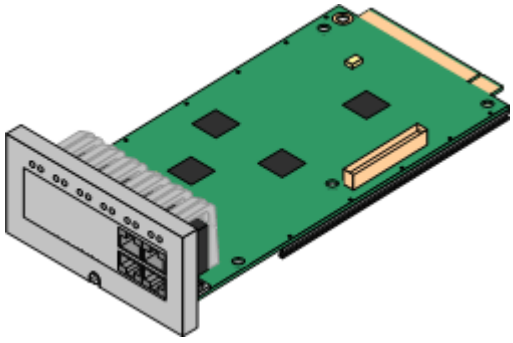

This card is available in variants supporting either 32 or 64 voice compression channels for use with VoIP calls.

- The card can be fitted with an IP500 trunk daughter card 26 which uses the base card ports for trunk connection.
- **Maximum:** 2 per control unit.

IP500 Legacy Card Carrier Base Card 228

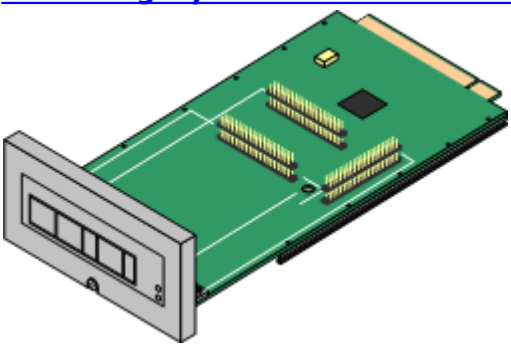

This card allows various IP400 trunk cards 27 and IP400 VCM cards 28 to be used. The front of the card includes panels that can be removed to match the trunk card fitted.

- This card does not accept any IP500 trunk daughter card.
- **Maximum:** 2 per control unit.
- **IP400 Cards Supported:** The following cards are supported.

✓ PRI T1	✓ PRI 30 E1R2 RJ45	✓ VCM 4
✓ Dual PRI T1	✓ Dual PRI E1R2 RJ45	✓ VCM 8
✓ PRI 30 E1 (1.4)	✓ BRI-8 (UNI)	✓ VCM 16
✓ Dual PRI E1	✓ ANLG 4 Uni (US only)	✓ VCM 24
		✓ VCM 30

IP500 4-Port Expansion Base Card 218

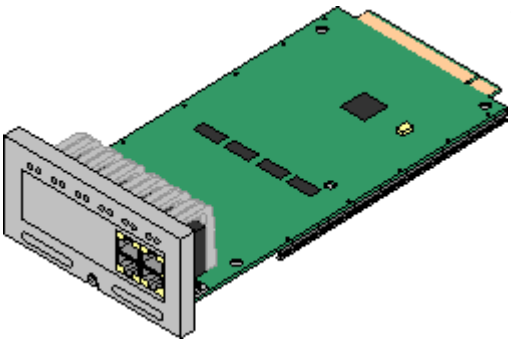

This card adds an additional 4 expansion ports for external expansion modules. The card is supplied with four 2m yellow interconnect cables.

- This card does not accept any IP500 trunk daughter card.
- **Maximum:** 1 per control unit (Right-hand slot 4 only).
- **Supported Expansion Modules:** The following external expansion modules are supported:
  - IP500 Analogue Trunk Module
  - IP500 BRI So Module
  - IP500 Digital Station Modules
  - IP500 Digital Station Modules A
  - IP500 Phone Module
  - IP400 Digital Station V2 Modules
  - IP400 Phone V2 Modules

IP500 BRI Combination Card 222

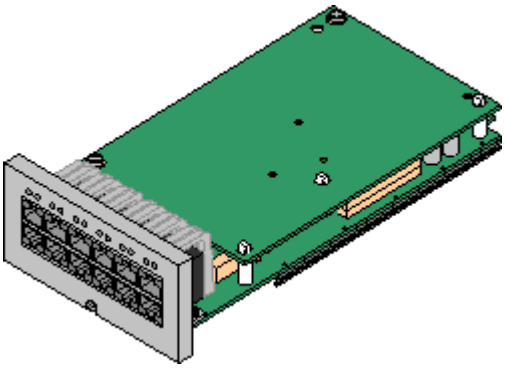

This card provides 6 digital station ports (1-6), 2 analog extension ports (7-8) and 2 BRI trunk ports (9-10, 4 channels). The card also includes 10 voice compression channels.

- This card has a pre-installed IP500 BRI trunk daughter card 26.
- **Maximum:** 2 combination cards per IP500 V2 control unit, regardless of type. Not supported by IP500 control units.
  - IP Office Basic Edition - Norstar Mode and IP Office Basic Edition - Quick Mode systems are limited to a maximum of 12 BRI channels using BRI Combination and or BRI trunk daughter cards.

IP500 ATM Combination Card/IP500 ATM Combination Card V2 220

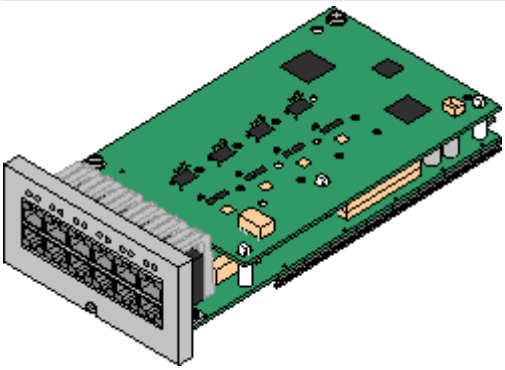

This card provides 6 digital station ports (1-6), 2 analog extension ports (7-8) and 4 analog trunk ports (9-12). The card also includes 10 voice compression channels.

- This card has a pre-installed IP500 analog trunk daughter card 26.
- **Maximum:** 2 combination cards per IP500 V2 control unit, regardless of type. Not supported by IP500 control units.
  - The analog phone ports do not include a ringing capacitor. Where this is a requirement, connection should be via a Master socket containing ringing capacitors.
  - If fitted with an IP500 Analog Trunk daughter card, during power failure phone port 8 is connected to analog trunk port 12.

IP500 ETR6 Base Card 226

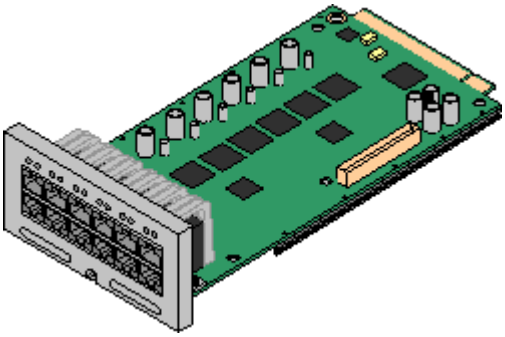

This card is only supported in an IP500 V2 control unit running in IP Office Basic Edition - PARTNER® Mode or IP Office Basic Edition - Quick Mode. It is not supported in IP Office Basic Edition - Norstar Mode or IP Office Essential Edition.

It provides 6 ETR ports for connection of ETR phones. 2 Analog extension ports are also provided for emergency use only with an analog trunk card.

- The card can be fitted with an IP500 trunk daughter card which uses the base card ports for trunk connection.
- **Maximum:** 3 per IP500 V2 control unit. Not supported by IP500 control units.
- The analog phone ports do not include a ringing capacitor. Where this is a requirement, connection should be via a Master socket containing ringing capacitors.
- If fitted with an IP500 Analog Trunk daughter card, during power failure phone ports 7 and 8 are connected to analog trunk port 12. However during normal operation analog phone ports 7 and 8 are not useable.

Unified Communications Module 223

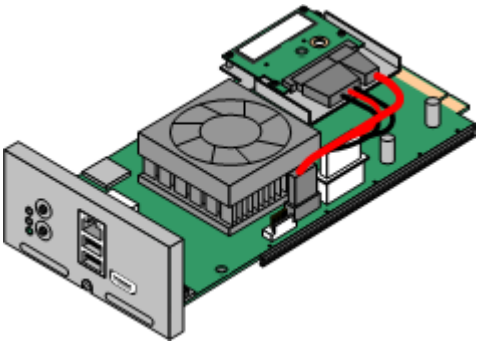

This card is only supported in an IP500 V2 control unit running in IP Office Essential Edition, IP Office Preferred Edition or IP Office Advanced Edition. It acts as an embedded Linux server for the one-X Portal for IP Office and Voicemail Pro applications. The presence of this card acts as a Preferred Edition license for the host system.

1.5.2 IP500 Trunk Cards

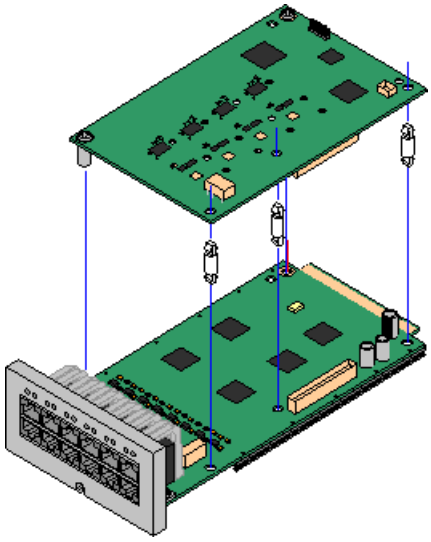

Most IP500 base cards 23 can be fitted with an IP500 trunk daughter cards to support the connection of trunks to the base card.

Each daughter card is supplied with the stand off pillars required for installation and a label to identify the daughter cards presence on the front of the base card after installation.

- IP500 Combination cards are pre-fitted with a trunk daughter card which cannot be removed or changed for another type of trunk daughter card.

IP500 Analog Trunk Card/IP500 Analog Trunk Card V2 233

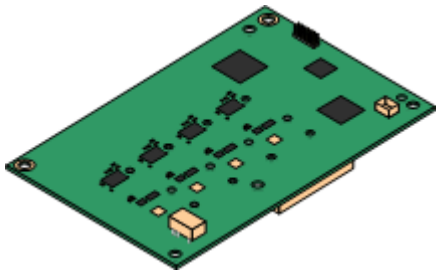

These cards allow the base card to support 4 analog loop-start trunks.

- The analog phone ports do not include a ringing capacitor. Where this is a requirement, connection should be via a Master socket containing ringing capacitors.
- If fitted with an IP500 Analog Trunk daughter card, during power failure phone port 8 is connected to analog trunk port 12.

- **Maximum:** 4 per control unit. The IP500 Analog Trunk Card V2 is only supported in the IP500 V2.

IP500 PRI-U Trunk Card 236

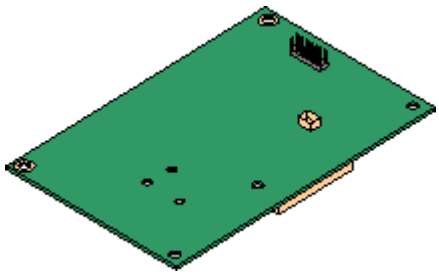

This card allows the base card to support up to 2 PRI trunk connections. The card is available in single and dual port variants. The card can be configured for E1 PRI, T1 robbed bit, T1 PRI or E1R2 PRI trunks.

- **Maximum:** 4 per control unit.
- The IP Office system supports 8 unlicensed B-channels on each IP500 PRI-U port fitted. Additional B-channels, up to the capacity of ports installed and PRI mode selected require **IP500 Universal PRI (Additional Channels)** 408 licenses added to the configuration. These additional channels consume the licenses based on which additional channels are configured as in-service from port 9 of slot 1 upwards. D-channels are not affected by licensing.

IP500 BRI Trunk Card 235

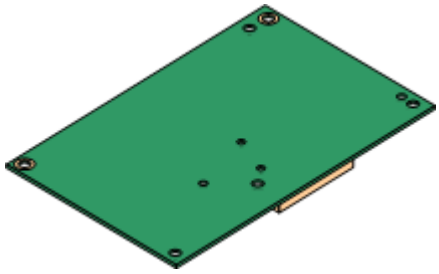

This card allows the base card to support up to 4 BRI trunk connections, each trunk providing 2B+D digital channels. The card is available in 2 port (4 channels) and 4 port (8 channels) variants.

- **Maximum:** 4 per control unit.
- **S-Bus Connection**: The card can be switched from To trunk mode to So mode. This mode requires additional terminating resistors and an ISDN crossover cable connection, see BRI Port (So) 393.
  - IP Office Basic Edition - Norstar Mode and IP Office Basic Edition - Quick Mode systems are limited to a maximum of 12 BRI channels using BRI Combination and or BRI trunk daughter cards.

1.5.3 IP400 Trunk Cards

IP400 trunk cards can be used in IP500 and IP500 V2 controls units by being fitted onto an IP500 Legacy Card Carrier 228 base card. Up to 2 cards can be added to the control unit in this way.

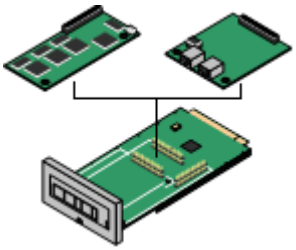

The following IP400 trunk card types are supported in this way by IP Office Release 8.1:

IP400 Trunk Cards		IP500	IP500 V2
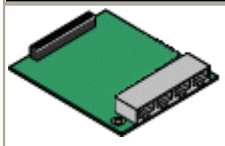	**Analog Trunk Card (ATM4)** 255 Provides 4 RJ45 loop-start analog trunk ports. The card is available in several locale specific variants. This card has been superseded by the ATM4U card below. Additional loop or ground start analog trunks can also be added using **Analog Trunk** 262 external expansion modules.	✓	✓
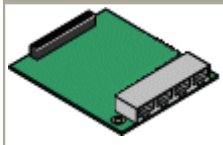	**Analog Trunk Card (ATM4U)** 254 Provides 4 RJ45 loop-start analog trunk ports as per the ATM4 above but available in a single worldwide variant. Also supports adjustable echo cancellation on IP Office 3.1. Additional loop or ground start analog trunks can also be added using Analog Trunk 262 external expansion modules.	✓	✓
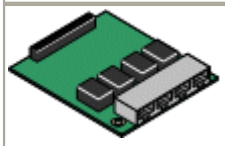	**Quad BRI Trunk Card** 255 Provides support for 4 RJ45 BRI (2B+D) trunk ports. These can be configured to ETSI or AusTS013 operation. The ports include 100ohm termination.	✓	✓
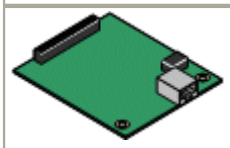	**Single PRI T1 Trunk Cards** 256 Supports PRI (23B+D) trunks and T1 Robbed-Bit (24B) trunks through a single RJ45 port. The mode of operation is selected in the IP Office configuration.	✓	✓
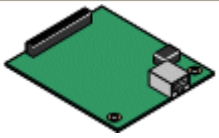	**Single E1 PRI Trunk Cards** 256 Supports PRI (30B+D) trunks through a single RJ45 port. The port can be configured for PRI or QSIG operation.	✓	✓
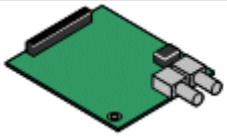	**Single E1R2 Trunk Cards** 257 Supports PRI (30B+D) trunks using E1R2 signaling. Available in coaxial or RJ45 connector variants. Coaxial variants are not supported on an IP500 carrier card.	✓	✓
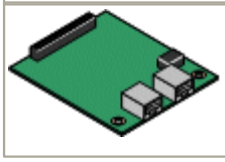	**Dual PRI Trunk Cards** 256 As the single PRI cards above but supporting the connection of two PRI trunks. On the IP406 V2, supported in Slot A only.	✓	✓

1.5.4 Other Cards

Each IP Office control unit can be fitted with a number of internal cards. The cards supported depend on the control unit type.

Embedded Voicemail Memory Cards

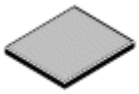

These cards provide message and prompt storage space for Embedded Voicemail and auto-attendant options. The cards used are specially formatted compact flash cards.

- The IP500 V2 control unit uses its SD Feature Key dongle card for Embedded Voicemail and file storage.

Embedded Voicemail Memory Cards	SAP Code	IP500	IP500 V2
IP406 V2 Memory Card: 258 Supports a 512MB Compact Flash card. This provides up to 15 hours of uncompressed message storage.	700343460	✓	–

- Memory cards in these slots can also be used for storage of files normally obtained via TFTP transfer. For example the music-on-hold .wav file and supported Avaya phone software files. This will however reduce storage space for prompt and message files if Embedded Voicemail is being used.
- IP Office systems that have downloaded an internal music on hold source can then backup and restore that music on hold to and from the memory card.
- Non-Avaya cards can be used for file storage but will not support Embedded Voicemail.

IP400 Voice Compression Modules

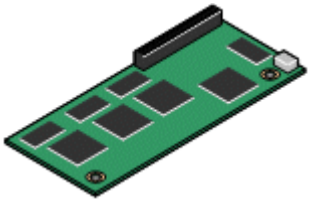

VCM cards are used to provide voice compression channels for calls between IP and non-IP devices, devices being both trunks and extensions. VCM cards with differing numbers of voice compression channels are available.

- For IP500 and IP500 V2 control units, voice compression channels can be added using combinations of IP400 VCM modules mounted on an IP500 Carrier Card, IP500 VCM cards and IP500 Combination cards. Note however that some features are only supported by IP500 VCM and Combination cards and are not supported by those cards if any IP400 VCM card is also present in the system: G.722 codec support, T.38 Fax Relay.

VCM Cards		SAP Code	IP500	IP500 V2
25ms echo cancellation.	**IP400 VCM5***	700185119	–	–
	IP400 VCM10*	700185127	–	–
	IP400 VCM20*	700185135	–	–
	IP400 VCM30	700293939	✓	✓
64ms echo cancellation.	**IP400 VCM4**	700359854	✓	✓
	IP400 VCM8	700359862	✓	✓
	IP400 VCM16	700359870	✓	✓
	IP400 VCM24	700359888	✓	✓
Number of IP400 VCM cards.			2	2
Maximum number of channels.			128	148

- *These modules are still supported but are no longer available from Avaya.

1.6 External Expansion Modules

These modules can be used to add additional ports to an IP Office systems. The number of external expansion modules supported depends on the control unit type. Each module uses an external power supply unit 36 supplied with the module. A locale specific power cord 37 for the PSU must be ordered separately.

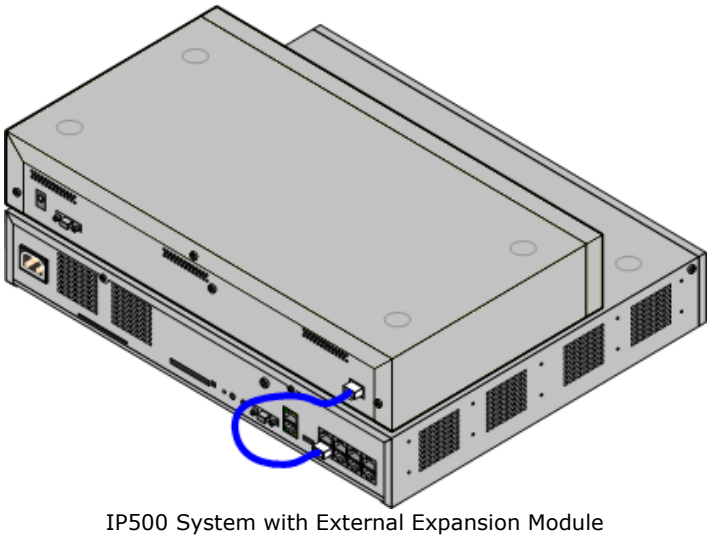

IP500 System with External Expansion Module

- Systems running in IP Office Basic Edition - PARTNER® Mode, IP Office Basic Edition - Norstar Mode or IP Office Basic Edition - Quick Mode support up to 8 external expansion modules so long as the system extensions limit is not exceeded.
- Systems running in IP Office Essential Edition support 8 external expansion modules or 12 if the control unit is fitted with an IP500 4-Port Expansion Base Card.
  - Each external expansion module is supplied with a blue 1 meter (3'3'') expansion interconnect cable. This cable must be used when connecting to expansion ports on the rear of a control unit.
  - When connecting to expansion ports on an IP500 4-Port Expansion card, a yellow 2 meter (6'6") expansion interconnect cable can be used in place of the standard blue cable. 4 Yellow cables are supplied with the IP500 4-Port Expansion card.

IP500 External Expansion Modules

Expansion modules include an external power supply unit (PSU) and a 1m blue interconnect cable. They do not include a locale specific power cord for the external PSU or any phone extension cables.

Variant	Country	SAP Code
Digital Phones (Non-IP)		
IPO 500 Digital Station 16	All	700449499
IPO 500 Digital Station 30	All	700426216
IPO 500 Digital Station 16A (RJ21)	All	700500699
IPO 500 Digital Station 30A (RJ21)	All	700500698
Analog Phones		
IPO 500 Phone 16	All	700449507
IPO 500 Phone 30	All	700426224

Others		
IPO 500 Analog Trunk 16	US	700449473
IPO 500 BRI So8	All	700449515

IP400 External Expansion Modules

Expansion modules include an external power supply unit (PSU) and a 1m blue interconnect cable. They do not include a locale specific power cord for the external PSU or any phone extension cables.

Variant	Country	SAP Code
Analog Trunk		
IP400 Analog Trunk 16	North America	700211360
	Europe	700241680
	New Zealand	700241698
Digital Station		
IP400 Digital Station 16 V2	All	700359839
IP400 Digital Station 30 V2	All	700359847
IP400 Digital Station 16	All	700184807
IP400 Digital Station 30	All	700184880
Phone		
IP400 Phone 8 V2	All	700359896
IP400 Phone 16 V2	All	700359904
IP400 Phone 30 V2	All	700359912
IP400 Phone 8	All	700184773
IP400 Phone 16	All	700184781
IP400 Phone 30	All	700184799
S0 (BRI)		
IP400 So8	All	700185077

Connecting External Expansion Modules

The integral expansion ports on a control unit are located on the rear of the unit. For IP500 and IP500 V2 control units, an additional 4 expansion ports can be added to the front of the control unit by installing an IP500 4-Port Expansion card.

- Each external expansion module is supplied with a blue 1 meter (3'3'') expansion interconnect cable. This cable must be used when connecting to expansion ports on the rear of a control unit.
- When connecting to expansion ports on an IP500 4-Port Expansion card, a yellow 2 meter (6'6") expansion interconnect cable can be used in place of the standard blue cable. 4 Yellow cables are supplied with the IP500 4-Port Expansion card.

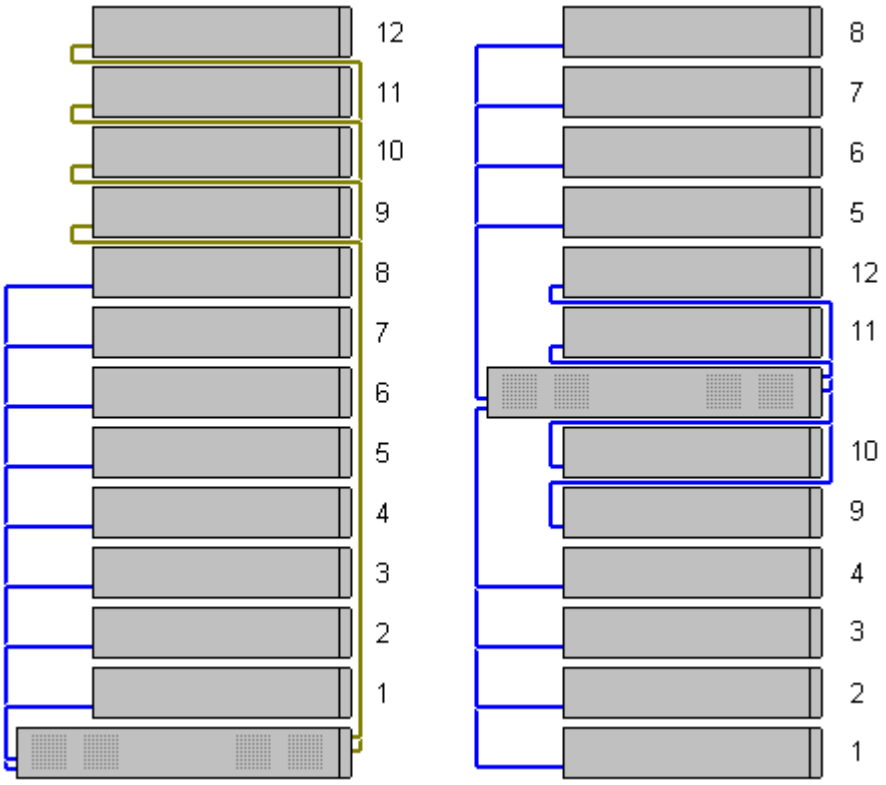

1.6.1 IP500 External Expansion Modules

The following IP500 external expansion modules are supported by IP Office Release 8.1. Each module uses an external power supply unit 36 supplied with the module. A locale specific power cord 37 for the PSU must be ordered separately.

The external module can be stacked on top of the control unit. They can also be wall or rack mounted using one of the IP Office mounting kits 274.

- Systems running in IP Office Basic Edition - PARTNER® Mode, IP Office Basic Edition - Norstar Mode or IP Office Basic Edition - Quick Mode support up to 8 external expansion modules so long as the system extensions limit is not exceeded.
- Systems running in IP Office Essential Edition support 8 external expansion modules or 12 if the control unit is fitted with an IP500 4-Port Expansion Base Card.

- **IP500 Digital Station Module** 243
  Provides, depending on variant, an additional 16 or 30 DS 395 ports for supported Avaya DS digital phones 46.

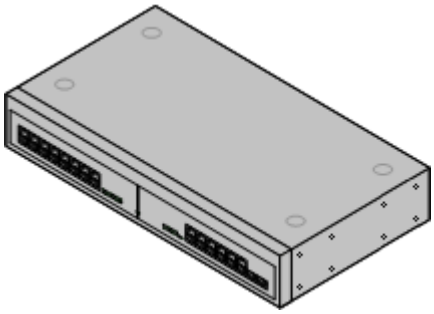

- **IP500 Digital Station A Module** 245
  Provides, depending on variant, an additional 16 or 30 TCM ports for supported Avaya TCM digital phones 46. Supported by IP500 V2 only.

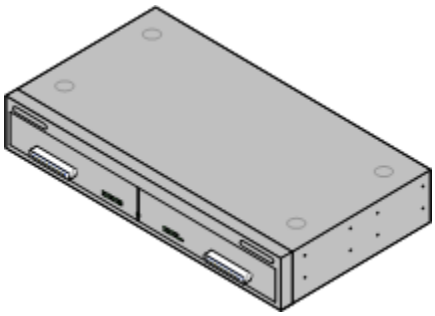

- **IP500 Phone Module** 248
  Provides, depending on variant, an additional 16 or 30 PHONE 401 ports for analog phones.

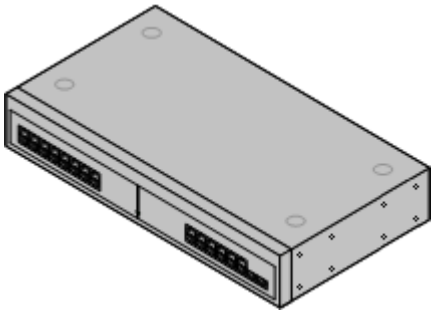

- **IP500 BRI So8 Module** 241
  Provides 8 ETSI BRI-So ports 393 for the connection of ISDN devices. This unit is not intended to support BRI trunks.

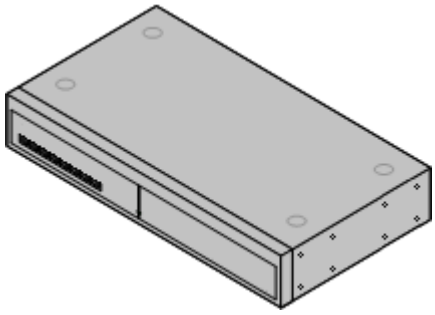

- **IP500 Analog Trunk Module** 239
  Provides an additional 16 ANALOG 392 ports for connection of analog trunks. Supports both loop-start and ground-start trunks.
  - Use with ground start trunks requires that the trunk module and the IP Office control unit are grounded.
  - In IP Office Basic Edition - PARTNER® Mode, IP Office Basic Edition - Norstar Mode and IP Office Basic Edition - Quick Modes, only 1 Analog Trunk module is supported.

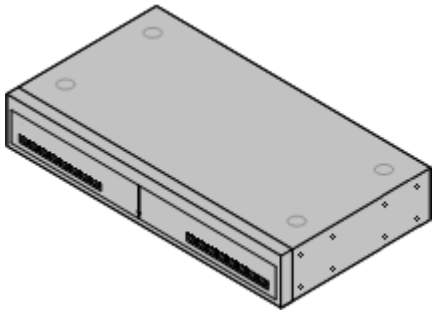

1.6.2 IP400 External Expansion Modules

The following IP400 external expansion modules are supported by IP Office Release 8.1 and can be used with an IP500 and IP500 V2 control units. Each module uses an external power supply unit 36 supplied with the module. A locale specific power cord 37 for the PSU must be ordered separately.

If being rack mounted these units use the IP400 rack mounting kit. If being rack mounted, these units use the IPO IP500 RACK MNTG KIT. They cannot be wall mounted.

- **IP400 Analog Trunk Module (ATM16)** 262
  Provides an additional 16 ANALOG 392 ports for connection of analog trunks. Supports both loop-start and ground-start trunks.
  - Available in a number of variants for different locales.
  - Use with ground start trunks requires that the trunk module and the IP Office control unit are grounded.

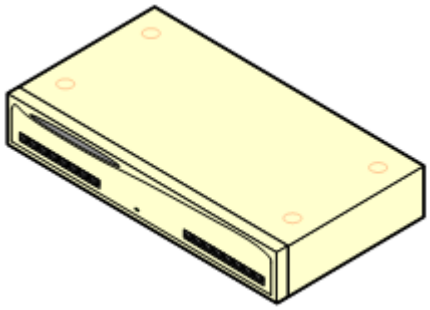

- **IP400 Digital Station Module** 266
  Provides, depending on the variant, an additional 16 or 30 DS 395 ports for supported Avaya digital phones. This module has been superseded by the Digital Station V2.

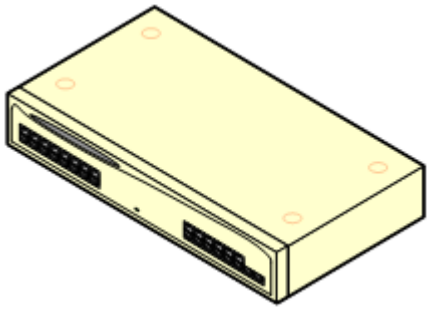

- **IP400 Digital Station Module V2** 264
  Provides, depending on variant, an additional 16 or 30 DS 395 ports for supported Avaya digital phones 46. Supersedes the previous Digital Station module.

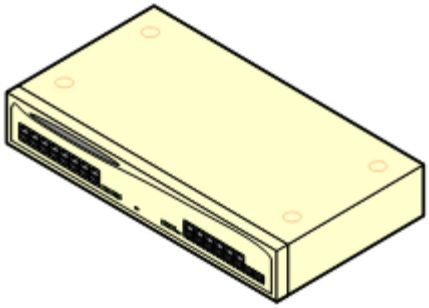

- **IP400 Phone Module** 270
  Provides, depending on variant, an additional 8, 16 or 30 POT 401 ports for analog phones. This module has been superseded by the Phone Module V2.

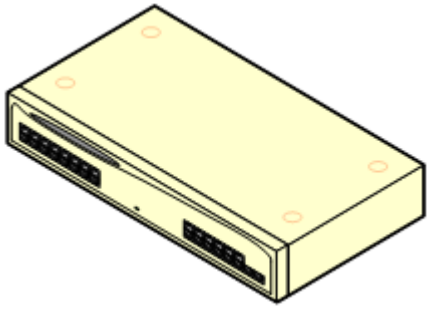

- **IP400 Phone Module V2** 268
  Provides, depending on variant, an additional 8, 16 or 30 PHONE 401 ports for analog phones. Supersedes the previous Phone module. With IP Office 3.1, the Phone V2 supports a wider range of message waiting indication (MWI) options than Phone V1 modules.
  - With V2 units, the labeling of analog phone ports was changed from POT to PHONE.

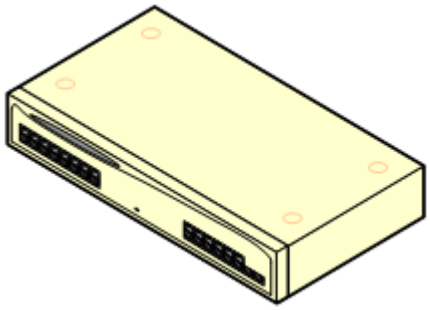

- **IP400 So8 Module** 272
  Provides 8 ETSI BRI-So 393 ports for the connection of ISDN devices. This unit is not intended to support BRI trunks.

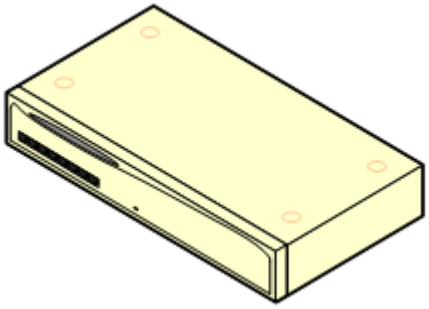

1.7 Power Supplies and Cables

All IP Office control units and external expansion modules either have an internal power supply unit or are supplied with an external power supply unit.

1.7.1 Power Supplies

The IP500 and IP500 V2 control units have an internal power supply unit and so only require a suitable locale specific power cord 37 and a power outlet that includes a switch. Note that if the power cord includes an earth lead, the power outlet must be connected to a protective earth.

External expansion modules are all supplied with an external power supply unit (PSU). These PSUs include an integral 1.5 meter lead for connection to the control unit or expansion module. A power cord 37 for connection from the PSU to the power outlet is not included as this varies by locale. The appropriate power cord must be ordered separately or sourced locally.

Additional power supply units are required for 4450, EU24, XM24 and T3 DSS add-on modules and may also be required for Avaya IP phones.

Area	Type	Used on:	Connector Type
IP Office Control Units and External Expansion Modules	**40W PSU**	Analog, Digital Station V1, Phone V1.	IEC60320 C7 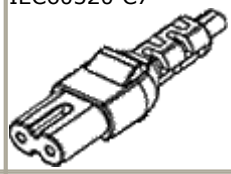
	60W Earthed PSU	IP400 Digital Station V2, IP400 Phone V2, IP400 So8, IP500 Phone 30, IP500 Digital Station 30, IP500 Digital Station 16A, IP500 Digital Station 30A.	IEC60320 C13 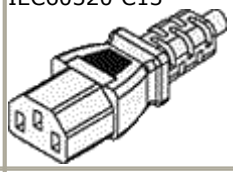
IP Phones and Phone Add-Ons	**1151D1**	All phones with XM24 Phone add-ons. All phones with EU24/EU24BL Phone add-ons unless using Class 3 PoE. 4600 and 56000 Series IP Phones when not using a PoE.	IEC60320 C13 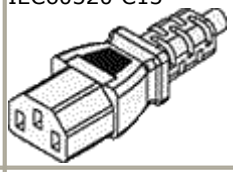
	1151D2		
	1600PWR 5V	Plug-top PSU used with 1600 Series phones on IP Office when not being power using PoE.	Various country variants.

- The 1151D2 is the same as the 1151D1 except that it includes a backup battery that is charged during normal operation. This can provide typically 15 minutes backup at maximum load (20 Watts) and up to 8 hours at light load (2 Watts).
- Avaya IP phones can use IEEE 802.3af Power over Ethernet (PoE) power supplies. Refer to the IP Office IP Phone Installation Manual for full details.

1.7.2 Power Supply Cords

Each control unit and expansion module requires a switched power outlet socket rated at 110-240V ac, 50-60Hz. Connection from that power outlet socket requires an appropriate locale specific power cord which is not supplied with the unit and must be ordered separately. Note that if the power cord includes an earth lead, the power outlet must be connected to a protective earth.

Power cords must not be attached to the building surface or run through walls, ceilings, floors and similar openings. Installation measures must be taken to prevent physical damage to the power supply cord, including proper routing of the power supply cord and provision of a socket outlet near the fixed equipment or positioning of the equipment near a socket outlet.

For locales not detailed below an appropriate power cord must be obtained locally.

Power Cord Type	Power Outlet Plug Type	Locales	SAP Codes
Earthed Power Cords (IEC60320 C13) 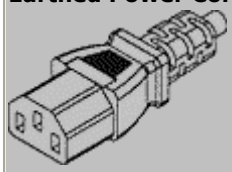 **Control Units** • IP500 V2. • IP500. **IP400 External Expansion Modules** • Digital Station V2. • Phone V2. • So8.* **IP500 External Expansion Modules** • BRI So8. • Digital Station 16/30. • Phone 16/30.	**CEE7/7 (Schuko)** 	Europe and South Africa.	700289762
	BS1363 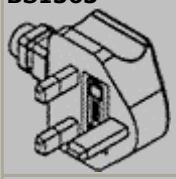	Czech Republic, Ireland, United Kingdom.	700289747
	NEMA5-15P / CS22.2 No.42 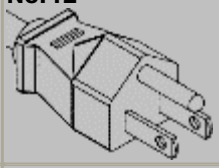	North, Central and South America.	700289770
Unearthed Power Cord (IEC60320 C7) 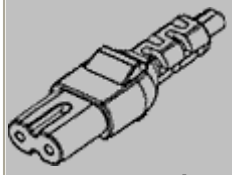 **IP400 External Expansion Modules** • Analog. • Digital Station V1. • Phone V1. **IP500 External Expansion Modules** • Analog Trunk 16.	**CEE7/16 (Europlug)** 	Europe and South Africa.	700213382
	BS1363 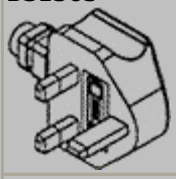	Czech Republic, Ireland, United Kingdom.	700213374
	NEMA1-15 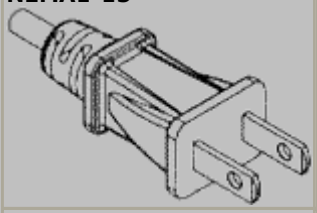	North, Central and South America.	700213390
		Korea.	700254519

*Older units were supplied with a 40W unearthed PSU and required an IEC60320 C7 power cord.

1.7.3 Power Supply Backup

The use of an Uninterrupted Power Supply (UPS) with any telephone system is strongly recommended. Even at sites that rarely lose electrical power, that power may occasionally have to be switched off for maintenance of other equipment. In addition, most UPSs also provide an element of power conditioning, reducing spikes and surges.

The capacity of UPS systems and the total equipment load the UPS is expected to support are usually quoted in VA. Where equipment load is quoted in Watts, multiply by 1.4 to get the VA load.

The calculation of how much UPS capacity is required depends on several choices.

- **What equipment to place on the UPS?**
  Remember to include server PCs such as the voicemail. It is recommended that the total load on a new UPS is never greater than 75% capacity, thus allowing for future equipment.
- **How many minutes of UPS support is required?**
  Actual UPS runtime is variable, it depends on what percentage of the UPS capacity the total equipment load represents. For example, a 1000VA capacity UPS may only support a 1000VA (100%) load for 5 minutes. This relationship is not linear, the same UPS may support a 500VA (50%) load for 16 minutes. Therefore, the lower the percentage of maximum capacity used, the increasingly longer the UPS runtime, for example up to 8 hours.
- **How frequent are the power loses?**
  You also need to include allowance for the UPS recharge time. For most UPS's the ratio of discharge to full recharge time is 1:10.
- **How many output sockets does the UPS provide?**
  Multiple UPS units may be required to ensure that every item of supported equipment has its own supply socket.

Example Values

The dominate factor in the power consumption of an IP Office system is the telephones attached to the control unit and any external expansion modules. This does not include IP telephones which require their own separate power supplies. If any server PCs are being used by the system, the requirements of those PCs should also be included in the assessment. Similarly support for adjunct systems such as DECT should be considered.

The following are worst case figures tested found using fully populated control units and external expansion modules:

- **IP500 V2 Control Unit:** 115W.
- **IP500 Digital Station 16 External Expansion Module:** 31W.
- **IP500 Digital Station 30 External Expansion Module:** 56W.
- **IP500 DS16A Digital Station RJ21 External Expansion Module:** 34W.
- **IP500 DS30A Digital Station RJ21 External Expansion Module:** 60W.
- **IP500 Phone 16 External Expansion Module:** 25W.
- **IP500 Phone 30 External Expansion Module:** 45W.
- **IP500 Analog Trunk Module 16 External Expansion Module:** 8.8W.

1.7.4 Cabling and Cables

The IP Office systems are designed primarily for use within an RJ45 structured cabling system using CAT3 unshielded twisted-pair (UTP) cabling and RJ45 sockets.

A structured cabling system is one where cables are run from a central RJ45 patch panel in the communications/data room to individual RJ45 sockets at user locations. All wires in each cable between the patch panel and the desk socket are connected straight through. This arrangement allows devices connected at the patch panel to be swapped to match the type of device that needs to be connected at the user socket. For example, making one user socket a phone port and another user socket a computer LAN port, without requiring any rewiring of the cables between the patch panel and the user location.

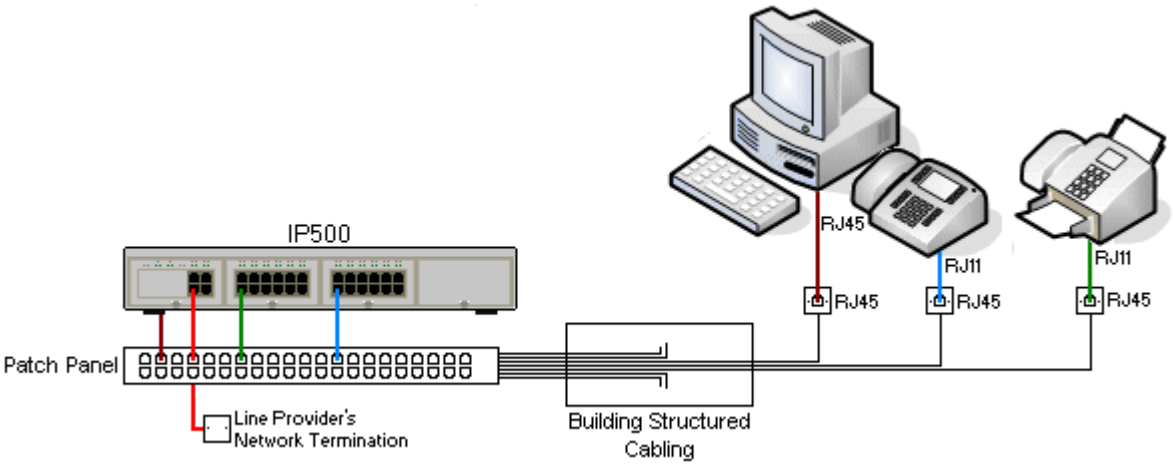

- **Traditional IDC Punchdown Wiring Installations**
  Where necessary, the far end RJ45 plug can be stripped from IP Office cables and wired into traditional wiring systems using punch-block connectors. This type of installation should be performed by an experienced wiring technician.
- **Trunk Connections**
  The majority of IP Office trunk ports use RJ45 connectors for acceptance of an RJ45-to-RJ45 cable. However, connection at the line provider's end may require use of a different plug type in order to match the line providers equipment.
- **RJ11 Phone Connectors**
  Many phones use RJ11 sockets and are supplied with RJ11-to-RJ11 cables. RJ11 plugs can be inserted into RJ45 sockets and in many case the connection will work. However this is not recommended or supported as the connection lock is not truly positive and may become disconnected. An RJ45-to-RJ11 cable 395 is available for these connections.

Standard IP Office Cables

The following are Avaya standard cables available for use with IP Office systems. The maximum length is applicable if the standard Avaya cable is replaced with an alternate cable.

Cable	Description	SAP Code	Standard Length	Maximum Length
9-Way DTE Cable 155	Connects to control unit RS232 DTE port. 9-Way D-type plug to 9-way D-type socket.	–	2m/6'6''.	2m/6'6''.
Structured Cabling DS Line Cable 395	Connects from RJ45 sockets to RJ11 socketed DS and analog phones.	TT700047871	4m/13'2''.	See table below.
BRI/PRI Trunk Cable 394	Connects BRI/PRI trunk ports to the line provider's network termination point. RJ45 to RJ45. Red.	700213440	3m/9'10''.	–
Expansion Interconnect Cable 398	Connects the control unit to expansion modules. RJ45 to RJ45. Blue. May be replaced by a yellow interconnect cable (2m (6'6") - 700472871) supplied with the IP500 4-Port Expansion 218 card when using that card.	700213457	1m/3'3''.	1m/3'3''.
LAN Cable 399	Connects from IP Office LAN ports to IP devices. RJ45 to RJ45. Grey.	700213481	3m/9'10''.	100m/328'.

The table below details the maximum total cable distances for DS and analog extensions using different cable types.

Telephone	Unshielded Twisted-Pair (UTP) - 50nf/Km			CW1308
	AWG22 (0.65mm)	AWG24 (0.5mm)	AWG26 (0.4mm)	
1400 Series	1200m/3937'.	1000m/3280'.	670m/2200'.	400m/1310'.
2400/5400 Series	1200m/3937'.	1000m/3280'.	670m/2200'.	400m/1310'.
4406D Phone	1000m/3280'.	1000m/3280'.	400m/1310'.	400m/1310'.
4412D Phone	1000m/3280'.	700m/2295'.	400m/1310'.	400m/1310'.
4424D	500m/1640'.	500m/1640'.	400m/1310'.	400m/1310'.
9500 Series	1200m/3937'.	1000m/3280'.	670m/2200'.	400m/1310'.
T3 Series (Upn)	1000m/3280'.	1000m/3280'.	400m/1310'.	–
TCM (without power booster)	–	305m/1000'	–	–
" (with power booster)	–	790m/2600'	–	–
Analog Phones	1000m/3280'.	1000m/ 3280'.	400m/1640'.	800m/2620'.
ETR Phones	305m/1000'.	305m/1000'.	122m/400'.	122m/400'.

1.7.5 Grounding

All IP Office control units and external expansion modules must be connected to a functional ground. Where the unit is connected to a power outlet using a power cord with an earth lead, the power outlet must be connected to a protective earth.

Use of ground connections reduces the likelihood of problems in most telephony and data systems. This is especially important in buildings where multiple items of equipment are interconnected using long cable runs, for example phone and data networks.

In some cases, such as ground start trunks, in addition to being a protective measure, this is a functional requirement for the equipment to operate. In other cases it may be a locale regulatory requirement and or a necessary protective step, for example areas of high lightning risk.

- ⚠ **WARNING**
  During installation do not assume that ground points are correctly connected to ground. Test ground points before relying on them to ground connected equipment.

The ground point on IP Office control units and external expansion modules are marked with a ⏚ or ⏚ symbol. Ground connections to these points should use a 14 AWG solid wire with either a green sleeve for a functional ground or green and yellow sleeve for a protective ground.

- **Additional protective equipment**
  In addition to grounding, additional protective equipment will be required in the following situations. Refer to "Out of Building Telephone Installations 42".
  - On any Digital Station or Phones external expansion module connected to an extension located in another building.
  - In the Republic of South Africa, on all Analog Trunk external expansion modules (ATM16) and on any control units containing an analog trunk cards (ATM4/ATM4U).

1.7.6 Lightning Protection/Out-of-Building Connections

The following are the only supported scenarios in which wired extensions and devices outside the main building can be connected to the IP Office system. In these scenarios, additional protection, in the form of protective grounding and surge protectors, must be fitted.

- ⚠ **WARNING**
  The fitting of additional protection does not remove the risk of damage. It merely reduces the chances of damage.

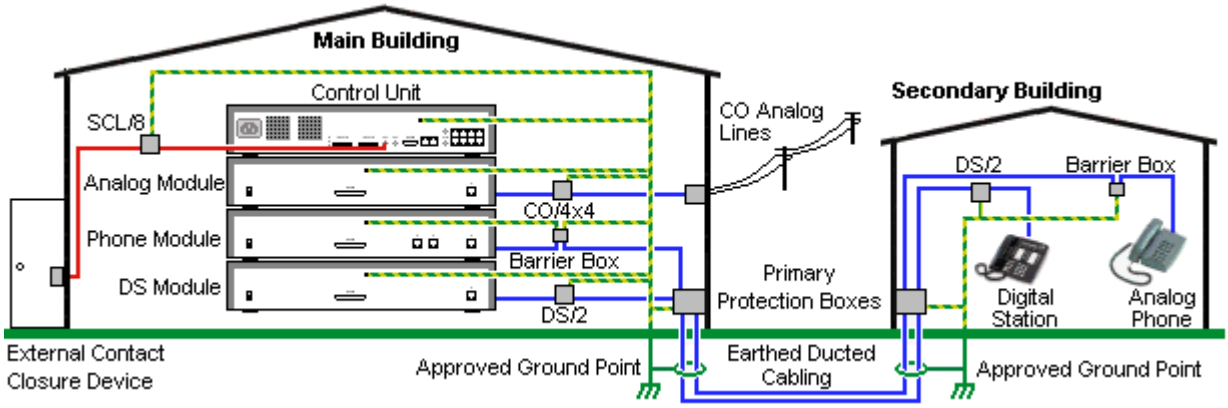

- Cables of different types, for example trunk lines, phone extensions, ground and power connections, should be kept separate.
- All cabling between buildings should be enclosed in grounded ducting. Ideally this ducting should be buried.
- A Primary Protection Box must be provided at the point where the cables enter the building. This should be three point protection (tip, ring and ground). Typically this would be gas tube protection provided by the local telephone company. The ground wire must be thick enough to handle all the lines being affected by indirect strike at the same time.

Connection Type	Protection Device Type	Requirement
Analog Phone Extensions Phones External expansion module (POT 40 or PHONE 40) ports only.	**IP Office Barrier Box** 144 Supports a single connection. Maximum of 16 on any expansion module.	• Connection from the expansion module to the phone must be via a surge protector at each end and via the primary protection point in each building. • The IP Office external expansion modules, control unit and IROB devices must be connected to the protective ground point in their building. • The between building connection must be via earthed ducting, preferable underground. The cable must not be exposed externally at any point.
DS Phone Extensions	**ITWLinx towerMAX DS/2** 143 Supports up to 4 connections. This device was previously referred to as the Avaya 146E.	
TCM Phone Extensions	None	Currently not supported.
Analog Trunks	**ITWLinx towerMAX CO/4x4** 143 Supports up to 4 two-wire lines. This device was previously referred to as the Avaya 146C.	For installations in the Republic of South Africa, the fitting of surge protection on analog trunks is a requirement. For other locations where the risk of lightning strikes is felt to be high, additional protection of incoming analog trunks is recommended.
External Output Switch	**ITWLinx towerMAX SCL/8** This device was previously referred to as the Avaya 146G.	Connections from an IP Office Ext O/P port to an external relay device must be via a surge protector.

The towerMAX range of devices are supplied by ITWLinx (http://www.itwlinx.com).

1.8 Wall and Rack Mounting

All the IP Office control units are designed to be free-standing. On systems with external expansion modules, the control unit and modules are intended to be stacked.

Using additional option mounting kits, some systems can be wall or rack mounted.

Control/Expansion Unit	Wall Mount	Rack Mount
IP500 Control Unit	✓	✓
IP500 V2 Control Unit	✓	✓
IP500 External Expansion Modules	✓	✓
IP400 External Expansion Modules	–	✓

Wall Mounting

IP500, IP500 V2 control units and IP500 external expansion modules can be wall mounted. To do this, a wall mounting kit is required in addition to suitable wall fixings.

In addition to the existing environmental requirements 60 for an IP Office system, the following additional requirements apply when wall mounting a unit:

- The wall surface must be vertical, flat and vibration free. Attachment to temporary walls is not supported.
- Only the screws provided with the mounting kit should used to attach the brackets to the control unit.

The following wall mounting kits exist.

- **IPO IP500 RACK MNTG KIT V3** *(SAP Code 700503160)*
  IPO IP500 RACK MNTG KIT V2 *(SAP Code 700500923)*
  These kits can be used for wall and rack mounting of an IP500 or IP500 V2 control unit and IP500 external expansion modules. The kits incorporates cable routing at the front and rear of the unit. For wall mounted control units it allows orientation of the control unit base card slots to the left or to the right.

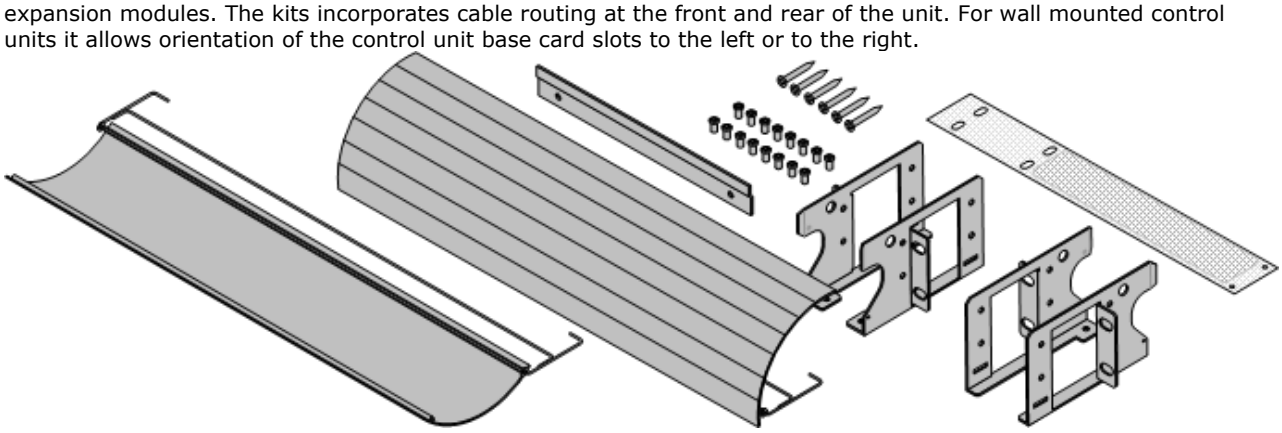

- **IPO IP500 WALL MNTG KIT** *(SAP Code 700430150)*
  This old design of wall mounting kit can be used for wall mounting an IP500 or IP500 V2 control units only. It does not provide any cable routing and requires the control unit to be mounted with the base card slots to the right only.

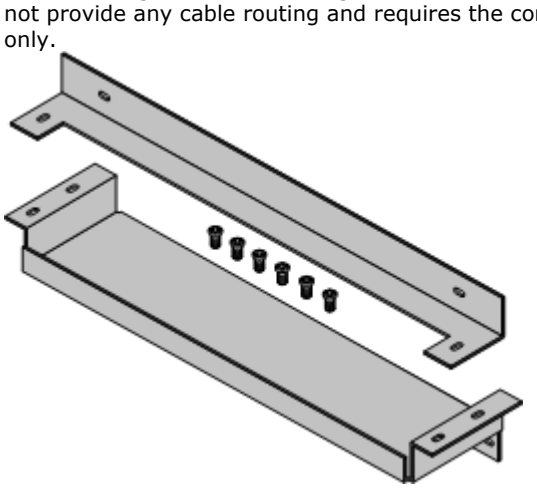

Rack Mounting

All IP Office control units and external expansion modules can be rack mounted into standard 19" rack systems. Each unit requires a 2U slot space within the rack. Rack mounting requires an IP400 or IPO IP500 RACK MNTG KIT for each control unit and external expansion module.

Where IP Office systems are being rack mounted, the effect of conditions within the rack cabinet must be considered. For example the rack temperature may be above the room temperature and airflow within the rack will be restricted. The environmental requirements 60 for the individual IP Office units are still applicable inside the rack cabinet.

Note that the new IPO IP500 RACK MNTG KIT V2 can also be used for rack mounting of units.

IPO IP500 RACK MNTG KIT

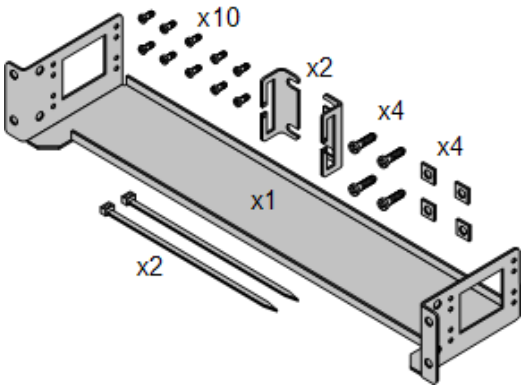

- **IPO IP500 RACK MNTG KIT** *(SAP 700429202)*
  This kit contains all the components required for the rack mounting of a single IP500 V2 control unit, IP500 control unit or IP500 external expansion module. This includes screws for fixing of the brackets to the module, bolts for securing the module in the rack and cable tidy brackets.

IP400 Rack Mounting Kit

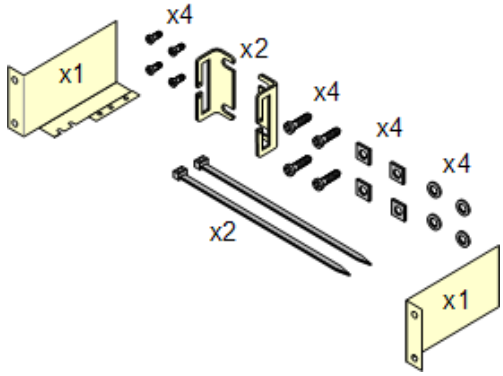

- **IP400 Rack Mounting Kit** *(SAP 700210800)*
  This kit contains all the components required for the rack mounting of a single control unit or expansion module. This includes screws for fixing of the brackets to the module and bolts for securing the module in the rack.

Barrier Box Rack Mounting Kit

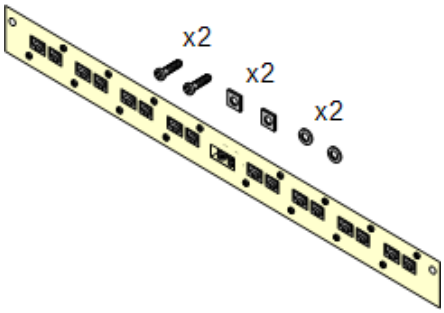

- **Barrier Box Rack Mounting Kit** *(SAP 700293905)*
  Barrier boxes must be used for out-of-building analog phone extensions 42. This bracket allows up to 8 IP Office barrier boxes to be rack mounted and simplifies the number of connections to the protective ground point in the rack. This kit must be used when more than 3 barrier boxes are in use and supports a maximum of 16 barrier boxes for a single external expansion module.

1.9 Feature Keys and Licenses

A feature key is required for licensed features.

- **IP500 V2 Avaya SD Card** 250
  Inserts into the System slot on the rear of an IP500 V2 control unit. This card is required even if not using any IP Office licenses.

- **IP500 Smart Card** 252
  Inserts into a dedicated slot on the rear of the IP500 control unit. This card is required even if not using any IP Office licenses.

Various IP Office features and applications require entry of licenses 405 into the system's configuration. The licenses are unique 32-character codes based on the feature being activated and the serial number of the feature key dongle 250 installed with the IP Office system.

The serial number is printed on the feature key dongle and prefixed with **SN** (IP500) or **FK** (IP500 V2). It can also be viewed in the system configuration using IP Office Manager.

- For IP500 and IP500 V2 systems, the feature key dongle takes the form of a card (smart media or SD card respectively) inserted into the control unit. The card is a mandatory item for these systems even if they use no licensed features.

When a license is entered into the IP Office configuration, the following information is shown.

- **Status**
  The status, which is ***Unknown*** until the configuration file is sent back to the IP Office system.
  - ***Unknown***
    This status is shown for licenses that have just been added to the configuration shown in IP Office Manager. Once the configuration has been sent back to the IP Office and then reloaded, the status will change to one of those below.
  - ***Valid***
    The features licensed can be configured and used.
  - ***Invalid***
    The license was not recognized. It did not match the serial number of the Feature Key.
  - ***Dormant***
    The license is valid but is conditional on some other pre-requisite that is not currently meet.
  - ***Obsolete***
    The license is valid but is one no longer used by the level of software running on the system.
  - ***Expired***
    The license has gone past its expiry date.
- **License**
  The name of the licensed feature. This may differ from the ordered RFA name.
- **Instances**
  Depending on the license, this may be the number of ports enabled or number of simultaneous users of the licensed feature. Sometime the number of instances is specified in the license name.
- **Expires**
  Most purchased licenses have no expiry setting. For some features, trial licenses may be available which will have an expiry date.

1.10 IP Office Phones

IP Office Release 8.1 supports the following phones and phone add-ons. Availability may depend on location and may be subject to local restrictions.

Enhanced Tip and Ring (ETR Port)

These phones are only supported on an ETR6 card in a IP500 V2 systems. They are only supported in IP Office Basic Edition - PARTNER® Mode and IP Office Basic Edition - Quick Mode systems running a North American locale. They are not supported in IP Office Basic Edition - Norstar Mode and IP Office Essential Edition and on any system running A-Law companding.

- **ETR Series:** ETR6 338, ETR6D 338, ETR18 340, ETR18D 340, ETR34D 341 *(ETR 34D phones are limited to a maximum of 2 per card and 4 in total)*
- **PARTNER DECT:** 3910 305, 3920 305

Digital Station (DS Port)

These digital stations connect to the IP Office via DS 395 ports. They are supported by all IP Office modes.

- **1400 Series:** 1403 281, 1408 282, 1416 283
- **9500 Series:** 9504 323, 9508 324

The following additional DS port phones are only supported in IP Office Essential Edition mode:

- **2400 Series:** 2402 290, 2410 291, 2420 292.
- **3800 Series:** 3810 Wireless phone 304 (Not supported on the IP500 and IP500 V2 control unit DS ports).
- **4400 Series:** 4406D 306, 4412D+ 307, 4424D+ 308 (Not supported on the IP500 and IP500 V2 control unit DS ports).
- **5400 Series:** 5402 315, 5410 316, 5420 317.
- **T3 (Upn) Series:** T3 Compact 353, T3 Classic 351, T3 Comfort 352.

Digital Station (TCM Port)

These digital stations connect to the IP500 V2 IP Office system via TCM ports. The following are supported in IP Office Basic Edition - PARTNER® Mode, IP Office Basic Edition - Norstar Mode, IP Office Basic Edition - Quick Mode and IP Office Essential Editions.

- **4100 Series:** 4135, 4136, 4145, 4145EX, 4146, 4146EX - Connection to IP Office TCM ports via a Digital Mobility Solution 366 system.
- **7400 Series:** 7420, 7430, 7434, 7439, 7440, 7444, 7449 - Connection to IP Office TCM ports via a Digital Mobility Solution 366 system.
- **ACU:** Audio Conferencing Unit 337
- **M-Series:** MT7100 342, MT7100N 342, MT7208 343, MT7208N 343, M7310 344, M7310N 344, M7324 345, M7324N 345 .
- **T-Series:** T7000 346, T7100 346, T7208 347, T7316 348, T7316E 349, T7406 350, T7406E 350

Analog Telephones

Analog phones and devices connect to PHONE 401 ports with the IP Office system. However due to the variety of analog phones and device available no guarantee of operation is given. It is the responsibility of the IP Office installer and maintainer to test and verify the operation of proposed analog equipment. Analog message waiting indication (MWI) is only supported with Avaya 6200 Series phones.

- **6200 Series:** 6211, 6219, 6221 *(North America)*.
- **B100 Series:** B149, B159.
- **Interquartz Gemini:** 9330-AV, 9335-AV, 9281-AV *(Europe, Middle East, Africa, Asia-Pacific)*.

IP Telephones

IP Phones (SIP and H323) connect to the IP Office system via the RJ45 LAN or WAN. These device require an Avaya IP Endpoint license and voice compression resources. They are not supported in IP Office Basic Edition - PARTNER® Mode, IP Office Basic Edition - Norstar Mode and IP Office Basic Edition - Quick Mode mode.

H323:

- **1600 Series:** 1603IP/SW 284, 1608 286, 1608-I 286, 1616 288, 1616-I 288
- **3600 Series:** 3616 293, 3620 294, 3626 295, 3641 296, 3645 297
- **3700 Series:** 3701 298, 3711 299 - Connection via DECT base stations. 3720 300, 3725 301, 3740 302, 3749 303 - Connection via DECT R4 base stations.
- **4600 Series:** 4601 309, 4602 310, 4602SW 310, 4610 311, 4610SW 311, 4620 312, 4620SW 312, 4621SW 313, 4625 314.
- **5600 Series:** 5601 318, 5602 319, 5602SW 319, 5610 320, 5620 321, 5621 322.
- **9600 Series:** 9608 325, 9611G 326, 9620L 327, 9620C 327, 9621G 329, 9630G 330, 9640 332, 9640G 332, 9641G 334, 9650 335, 9650C 335.
- **T3 IP Series:** T3 IP Compact 353, T3 IP Classic 351, T3 IP Comfort 352.

SIP:

- **1000 Series:** 1010 279, 1040 279
- **1100 Series:** 1120E 280, 1140E 280
- **1200 Series:** 1220 280, 1230 280
- **B100 Series:** B179.
- **D100 Series:** These DECT handsets (up to 8) use a base station that connects to the IP Office system using a SIP trunk and appear on the IP Office as SIP extensions.
- **Softphone:** Avaya IP Office SIP Softphone application.

1.11 VoIP

IP Office is a converged telephony system, that is it combines aspects of traditional PABX telephone systems and IP data and telephony systems. This works at various levels.

- Individual phone users can control the operation of their phone through applications running on their PC.
- Data traffic can be routed from the LAN interface to a telephony trunk interface, for example a dial-up ISP connection.
- Voice traffic can be routed across internal and external data links. This option is referred to as voice over IP (VoIP).

The VoIP mode of operation can include external SIP trunk, IP trunks between customer systems and or H.323 IP telephones for users. In either case the following factors must be considered:

- The IP Office control unit must be fitted with voice compression channels 50. These channels are used whenever an IP device (trunk or extension) needs to communicate with a non-IP device (trunk or extension) or a device that uses a different codec.
- A network assessment is a mandatory requirement for all systems using VoIP. For support issues with VoIP, Avaya may request access to the network assessment results and may refuse support if those are not available or satisfactory.

A network assessment would include a determination of the following:

- A network audit to review existing equipment and evaluate its capabilities, including its ability to meet both current and planned voice and data needs.
- A determination of network objectives, including the dominant traffic type, choice of technologies, and setting voice quality objectives.
- The assessment should leave you confident that the implemented network will have the capacity for the foreseen data and voice traffic, and can support H.323, DHCP, TFTP and jitter buffers in H.323 applications.
- An outline of the expected network assessment targets is:

Test	Minimum Assessment Target
Latency	Less than 150ms.
Packet Loss	Less than 3%.
Duration	Monitor statistics once every minute for a full week.

1.11.1 Voice Compression Channels

Calls to and from IP devices can require conversion to the audio codec format being used by the IP device. For IP Office systems this conversion is done by voice compression channels. These support the common IP audio codecs G.711, G.723 and G.729a. For IP Office Release 8.0 and higher, IP500 VCM and IP500 Combination cards also support G.722.

For IP400 control units channels can be added by fitting IP400 Voice Compression Modules (VCMs) 259. For the IP500 control units, channels can be added using IP500 VCM cards 230, IP500 Combination Cards 220 and or IP400 Voice Compression Modules 259.

The voice compression channels are used as follows:

Call Type	Voice Compression Channel Usage
IP Device to Non-IP Device	These calls require a voice compression channel for the duration of the call. If no channel is available, busy indication is returned to the caller.
IP Device to IP Device	Call progress tones (for example dial tone, secondary dial tone, etc) do not require voice compression channels with the following exceptions: • Short code confirmation, ARS camp on and account code entry tones require a voice compression channel. • Devices using G723 require a voice compression channel for all tones except call waiting. When a call is connected: • If the IP devices use the same audio codec no voice compression channel is used. • If the devices use differing audio codecs, a voice compression channel is required for each.
Non-IP Device to Non-IP Device	No voice compression channels are required.
Music on Hold	This is provided from the IP Office's TDM bus and therefore requires a voice compression channel when played to an IP device.
Conference Resources and IP Devices	Conferencing resources are managed by the conference chip which is on the IP Office's TDM bus. Therefore, a voice compression channel is required for each IP device involved in a conference. This includes services that use conference resources such as call listen, intrusion, call recording and silent monitoring.
Page Calls to IP Device	IP Office 4.0 and higher only uses G729a for page calls, therefore only requiring one channel but also only supporting pages to G729a capable devices.
Voicemail Services and IP Devices	Calls to the IP Office voicemail servers are treated as data calls from the TDM bus. Therefore calls from an IP device to voicemail require a voice compression channel.
Fax Calls	These are voice calls but with a slightly wider frequency range than spoken voice calls. IP Office only supports fax across IP between IP Office systems with the Fax Transport option selected. It does not currently support T38.
T38 Fax Calls	IP Office 5.0+ supports T38 fax on SIP trunks and SIP extensions. Each T38 fax call uses a VCM channel. Within a Small Community Network, a T38 fax call can be converted to a call across an H323 SCN lines using the IP Office Fax Transport Support protocol. This conversion uses 2 VCM channels. In order use T38 Fax connection, the **Equipment Classification** of an analog extension connected to a fax machine can be set ***Fax Machine***. Additionally, a new short code feature **Dial Fax** is available.

Note: T3 IP devices must be configured to 20ms packet size for the above conditions to apply. If left configured for 10ms packet size, a voice compression channel is needed for all tones and for non-direct media calls.

Measuring Channel Usage

The IP Office System Status Application can be used to display voice compression channel usage. Within the **Resources** section it displays the number of channel in use. It also displays how often there have been insufficient channels available and the last time such an event occurred.

The IP500 VCM cards, the level of channel usage is also indicated by the LEDs (1 to 8) on the front of the IP500 VCM card 230.

1.12 Supported Country Locales

When a new or defaulted system's configuration is first opened in Manager, the value set in the **Locale** field should always be checked and changed if necessary. The system's locale sets factors such as the default ringing patterns and caller display settings. The locale also controls the language that a voicemail server will use for prompts.

The locales supported in IP Office Essential Edition, IP Office Preferred Edition and IP Office Advanced Edition are:

- ***Argentina***
- ***Australia***
- ***Bahrain***
- ***Belgium***
- ***Brazil***
- ***Canada***
- ***Chile***
- ***China***
- ***Colombia***
- ***Denmark***
- ***Egypt***
- ***Finland***
- ***France***
- ***Germany***
- ***Greece***
- ***Hong Kong***
- ***Hungary***
- ***Iceland***
- ***Ireland***
- ***India***
- ***Italy***
- ***Japan***
- ***Korea***
- ***Kuwait***
- ***Malaysia***
- ***Mexico***
- ***Morocco***
- ***Netherlands***
- ***New Zealand***
- ***Norway***
- ***Oman***
- ***Pakistan***
- ***Peru***
- ***Poland***
- ***Portugal***
- ***Qatar***
- ***Russia***
- ***Saudi Arabia***
- ***Singapore***
- ***South Africa***
- ***Spain***
- ***Sweden***
- ***Switzerland***
- ***Taiwan***
- ***Turkey***
- ***United Arab Emirates***
- ***United Kingdom***
- ***United States***
- ***Venezuela***

1.13 IP Office Software Applications

The IP Office applications are available on a number of DVDs. These can be ordered at a nominal cost to cover order processing and delivery. Separate installation packages for IP Office applications can also be downloaded from the Avaya support website at http://support.avaya.com.

Title	Discs	Description	SAP Code
IP Office Release 8.1 Admin and User DVD Set	2	These DVDs contain installation packages for all the main IP Office administration and user applications. They also contain documentation for IP Office. • **DVD 1:** Contains the IP Office Administrator Applications suite, IP Office Documentation, IP Office User Applications, IP Office Voicemail Pro. • **DVD 2:** Contains the Customer Call Reporter, ContactStore for IP Office and one-X Portal for IP Office applications.	700503230
Voicemail Pro ScanSoft TTS DVD Set	2	Contains text to speech engines for use with Voicemail Pro's TTS functions. Supports the same languages as Voicemail Pro pre-recorded prompts except Hungarian.	–
IP Office 8.1 Application Server DVD Set	2	Install DVD for Voicemail Pro and one-X Portal for IP Office applications as a Linux based server. The second DVD contains open source material used for the first DVD.	700503231
IP Office Application Server TTS DVD Set	3	Contains text to speech engines for use with Linux based Voicemail Pro's TTS functions.	–
IP Office Release 8.1 Server Edition Installation DVD	1		700503228

- It is acceptable to make copies of the Avaya IP Office DVDs listed above. However the content must remain intact, unaltered and without change or addition. Avaya does not accept any liability and responsibility for damage or problems arising from the use of such copies.

Programming Applications

The following applications are used to program and maintain an IP Office system. Typically they run on a PC connected to the IP Office system via its LAN interface. These applications are all provided on the IP Office Administrator Applications DVD and don't require any licenses.

Due to the nature of the applications, if installed on a PC at the customer site, this should be a secure PC or the PC of a trusted user. If a voicemail server PC is also being installed with the IP Office system, the same PC can be used for the programming and maintenance applications.

For maintainers, these applications can also be run remotely if a route for data connections to the customer's IP Office exists from the maintainer's location.

- **IP Office Manager** 372
  This tool is used to access all parts of the IP Office configuration. Different levels of access can be defined to control which parts of the configuration the Manager user can view and alter. Manager is also used to upgrade the software files used by an IP Office system.
- **System Status Application** 379
  This application can be used to inspect the current status of IP Office lines and extensions and to view records of recent alarms and events. It runs as a Java application.
- **SNMP MIBs** 150
  Not an application as such. Using IP Office SNMP MIB files the status of the IP Office system to be monitored by 3rd-party SNMP applications such as Castlerock and HP OpenView. When configured for SNMP operation, the IP Office can also send alerts for potential problems. IP Office systems also support the sending of the same alerts to SMTP email or Syslog addresses.
  - The alarms configurable for output via SNMP can also be output to SMTP email and or Syslog.
  - The use of SNMP only supported with IP Office Essential Edition systems, it is not supported with IP Office Basic Edition - PARTNER® Mode, IP Office Basic Edition - Norstar Mode and IP Office Basic Edition - Quick Mode systems.
- **Monitor (SysMon)** 373
  Monitor is a tool that can show a trace of all activity on the IP Office system in detail. As a consequence, interpretation of Monitor traces requires a high-level of data and telephony protocol knowledge. Despite that however, all IP Office installers and maintainers need to understand how to run Monitor when necessary as Avaya may request copies of Monitor traces to resolve support issues.

User Applications

The IP Office supports a number of applications that operate in parallel with users telephones. These applications are installed from the IP Office Applications DVD. The one-X Portal for IP Office server can also be installed as part of the IP Office Application DVD installation.

Some of them require licenses to be entered into the IP Office system's configuration to enable features or to set the number of simultaneous users.

These applications are supported in IP Office Essential Edition. They are not supported in IP Office Basic Edition - PARTNER® Mode, IP Office Basic Edition - Norstar Mode and IP Office Basic Edition - Quick Modes.

- **one-X Portal for IP Office** 374
  This application is installed on a server PC connected to the IP Office. Users can access the one-X portal from their own PC using a web browser. The application allows the user to control their phones, access voicemail messages, call logs and phone directories.
- **SoftConsole** 377
  This is a licensed application. It is intended for telephone system operators or receptionists. It displays details of calls and allows them to quickly see the status of the callers required destination and transfer the call. The SoftConsole user is able to access a range of details about the status of users and groups on the IP Office system. Up to 4 simultaneous SoftConsole users can be licensed.

For systems running in IP Office Basic Edition - PARTNER® Mode, IP Office Basic Edition - Norstar Mode and IP Office Basic Edition - Quick Modes, the following is supported:

- **TAPILink Lite** 380
  The Microsoft Telephony Application Program Interface (TAPI) allows TAPI compliant applications to interact with IP Office phones by installing an IP Office TAPI driver. TAPILink Lite does not require any licenses entered into the IP Office system's configuration. It allows TAPI compliant applications such as Outlook to make and answer calls. The speech part of the calls is still via the user's physical phone.

Voicemail Applications

The IP Office supports a range of applications for the recording and playing of voicemail messages.

- **Embedded Voicemail** 258
  This application is supported on all IP Office Release 6.0 systems. Embedded Voicemail supports basic voicemail mailbox operation, simple auto-attendants and hunt group announcements. For IP500 and IP500 V2 controls units, Embedded Voicemail is provided by the Avaya SD card fitted by default.
- **Voicemail Pro** 381
  This voicemail application runs on a server PC connected to the IP Office. It requires various licenses entered into the IP Office configuration to control the features it offers and the number of simultaneous connections. The operation of Voicemail Pro can be customized to provide special services.
- **ContactStore for IP Office** 370
  Voicemail Pro can be used for manual and automatic call recording. Those recording are placed into mailboxes. Contact Store allows those recordings to be redirected into a database on the ContactStore PC. This allows recordings to be archived and searched separately from mailbox messages. This application requires entry of a license into the IP Office configuration.

Call Logging Applications

A wide range of 3rd -party applications exist to provide call logging and accounting for telephone systems. To support these the IP Office provides an SMDR output.

- **SMDR Output**
  For IP Office Release 5.0 and higher, the IP Office control unit directly output SMDR records to a specified IP address.

Call Center Application

- **Customer Call Reporter** 371
  This application is installed on a server PC connected to the IP Office. Users access the application from their PC using a web browser. The application obtains data about the calls handled by CCR agents and groups from the IP Office system and stores that data in an MS-SQL database. It can support up to 150 agents and 75 supervisors.

CTI Applications

- **TAPILink Pro**
  Using the same software as TAPILink Lite, TAPILink Pro provides all of the features and functionality of TAPILink Lite, but additionally provides third party CTI operation. This means that a single server can control and monitor any number of telephone devices. This requires entry of a CTI Link Pro license. TAPILink Pro also provides the ability to monitor and control groups. This allows an application to be notified when a call enters a queue, and can also redirect it to another location.
- **TAPI WAV driver**
  Provides software-based support for voice processing. Purchasing the CTI Link Pro RFA license key also enables 4 ports of voice processing; additional ports can be purchased in 4 port increments. The TAPI-WAV driver is for use with TAPI 2.1 only; for TAPI 3.0, IP Office supports the Media Service Provider (MSP) interface, defined by Microsoft in TAPI 3.0.
- **DevLink Pro**
  Provides a real-time event stream in addition to the SMDR interface provided in IP Office SMDR (see below). The real-time event stream takes the form of a call record, which is issued whenever the state of any endpoint of a call changes (typically there are two endpoints on a call, but for some circumstances, such as conference calls, intruded calls there may be more).

1.14 Training

Avaya University provides a wide range of training courses for IP Office and its associated applications. This includes courses necessary for IP Office resellers to become Avaya Authorized Channel Partners and for individuals to achieve IP Office certification.

Details of courses can be found on the Avaya University web site (http://www.avaya-learning.com). The site can be used to check course availability and to book course. It also includes on-line courses and on-line course assessments. The site requires users to setup a user name and password in order to track their personal training record.

1.15 Web Sites

Information to support the IP Office can be found on a number of web sites.

- **Avaya** *(http://www.avaya.com)*
  The official web site for Avaya. The front page also provides access to individual Avaya web sites for different countries.
- **Avaya Enterprise Portal** *(http://partner.avaya.com)*
  This is the official web site for all Avaya Business Partners. The site requires registration for a user name and password. Once accessed, the site portal can be individually customized for what products and information types you wish to see and to be notified about by email.
- **Avaya Support** *(http://support.avaya.com)*
  Contains documentation and other support materials for Avaya products including IP Office. Copies of the IP Office CD images are available from this site and updated core software .bin files.
- **Avaya IP Office Knowledge Base** *(http://marketingtools.avaya.com/knowledgebase)*
  Access to an on-line regularly updated version of the IP Office Knowledge Base.
- **Avaya University** *(http://www.avaya-learning.com)*
  This site provides access to the full range of Avaya training courses. That includes both on-line courses, course assessments and access to details of classroom based courses. The site requires users to register in order to provide the user with access to details of their training record.
- **Avaya Community** *(http://www.aucommunity.com)*
  This is the official discussion forum for Avaya product users. However it does not include any separate area for discussion of IP Office issues.
- **Other Non-Avaya Web Sites**
  A number of third-party web forums exist that discuss IP Office. These can act as useful source of information about how the IP Office is used. Some of these forums require you to be a member and to register. These are not official Avaya forums and their content is not monitored or sanctioned by Avaya.
  - **Tek-Tips** *(http://www.tek-tips.com)*
  - **IP Office Info** *(http://www.ipofficeinfo.com)*
  - **Yahoo Groups** *(http://groups.yahoo.com/group/ipoffice)*
  - **PBX Tech** *(http://www.pbxtech.info/forumdisplay.php?f=8)*

1.16 Emergency and Power Failure Ports

IP Office systems can provide 2 types of analog extension power failure ports. These are:

Type	Description	Provided By:
Switching Power Failure Ports	During normal IP Office operation these ports can be used for normal analog phone connection. During power failure the port is directly connected to an analog trunk port.	• **IP500 Analog Phone 8 Card** When an IP500 Analog Phone 8 base card is fitted with an IP500 Analog Trunk daughter card, during power failure extension port 8 is connected to analog trunk port 12. • **IP500 ATM Combination Card/IP500 ATM Combination Card V2** On this card, during power failure, extension port 8 is connected to analog trunk port 12.
Emergency Only Power Failure Ports	During normal IP Office operation these ports cannot be used. During power failure the port is directly connected to an analog trunk port.	• **IP500 Analog Trunk Daughter Card/ IP500 Analog Trunk Daughter Card V2** Regardless of the IP500 card hosting it, during power failure pins 4 and 5 of port 12 are connected to pins 7 and 8. • **IP400 ATM16 External Expansion Module** This external expansion module has two ports, PF1 and PF2, on its rear. During power fail conditions, PF1 is internally connected to ANALOG port 1 on the module, PF2 is internally connected to ANALOG port 2 on the same module. • **IP500 ETR6 Card** On this card, during normal operation extension ports 7 and 8 are not useable. However, if the card is fitted with an IP500 Analog Trunk daughter card, during power failure extension ports 7 and 8 are connected to analog trunk port 12.

In all cases these only work with loop-start analog trunks. Any phones connected to these ports should be clearly labeled as power fail extensions in accordance with the appropriate national and local regulatory requirements.

Chapter 2.
Installation Requirements

2. Installation Requirements

2.1 Environmental Requirements

The planned location must meet the following requirements. If being installed into a rack system, these are requirements for within the rack:

1. ☐ Temperature: 5°C to 40°C / 40°F to 104°F.
2. ☐ Humidity: 10% to 95% non-condensing.
3. ☐ Check there are no flammable materials in the area.
4. ☐ Check there is no possibility of flooding.
5. ☐ Check that no other machinery or equipment needs to be moved first.
6. ☐ Check that it is not an excessively dusty atmosphere.
7. ☐ Check that the area is unlikely to suffer rapid changes in temperature and humidity.
8. ☐ Check for the proximity of strong magnetic fields, sources of radio frequency and other electrical interference.
9. ☐ Check there are no corrosive chemicals or gasses.
10. ☐ Check there is no excessive vibration or potential of excessive vibration, especially of any mounting surface.
11. ☐ Check that where telephones are installed in another building, that the appropriate protectors and protective grounds are fitted (see Out of Building Telephone Installation 42).
12. ☐ Check there is suitable lighting for installation, system programming and future maintenance.
13. ☐ Check that there is sufficient working space for installation and future maintenance.
14. ☐ Ensure that likely activities near the system will not cause any problems, e.g. access to and maintenance of any other equipment in the area.
15. ☐ Where ventilation holes are present on any of the IP Office units, those holes should not be covered or blocked.
16. ☐ The surface must be flat horizontal for free-standing or rack mounted installations.

Wall Mounting

In additional to the requirements above, the following are applicable to IP Office units that support wall mounting.

1. Units must only be mounted onto permanent wall surfaces.
2. The surface must be vertical and flat.
3. Orientation of the unit must be as shown in the section on IP500 Wall Mounting 89.
4. The appropriate Avaya wall mounting kits must be used.

IMPORTANT SAFETY INSTRUCTIONS

When using your telephone equipment, basic safety precautions should always be followed to reduce the risk of fire, electric shock and injury to persons, including the following:

1. Do not use this product near water, for example, near a bath tub, wash bowl, kitchen sink or laundry tub, in a wet basement or near a swimming pool.
2. Avoid using a telephone (other than a cordless type) during an electrical storm. There may be a remote risk of electric shock from lightning.
3. Do not use the telephone to report a gas leak in the vicinity of the leak.
4. Use only the power cord and batteries indicated in this manual.

2.2 Space Requirements

IP Office control units and modules are designed to be installed either in a free-standing stack or into a 19" rack system. Rack installation requires a rack mounting kit 43 for each control unit and expansion module.

- **Cable Clearance**
  Clearance must be provided at the front and rear of all modules for cable access and feature key dongle connection.
  - On IP400 systems, allow a minimum clearance of 75mm (3 inches).
  - On IP500 and IP500 V2 systems allow a minimum clearance of 90mm (3.5 inches).
- **Additional Clearance**
  Care should be taken to ensure that the positioning of the modules does not interrupt air flow and other factors that may affect environmental requirements 60. This is especially important on IP500 and IP500 V2 control units which have ventilation slots at the side.
- **Cable Access**
  Power cords must not be attached to the building surface or run through walls, ceilings, floors and similar openings. Installation measures must be taken to prevent physical damage to the power supply cord, including proper routing of the power supply cord and provision of a socket outlet near the fixed equipment or positioning of the equipment near a socket outlet.

2.2.1 IP500 and IP500 V2 Control Units

The ventilation slots on the rear and sides should not be covered or blocked.

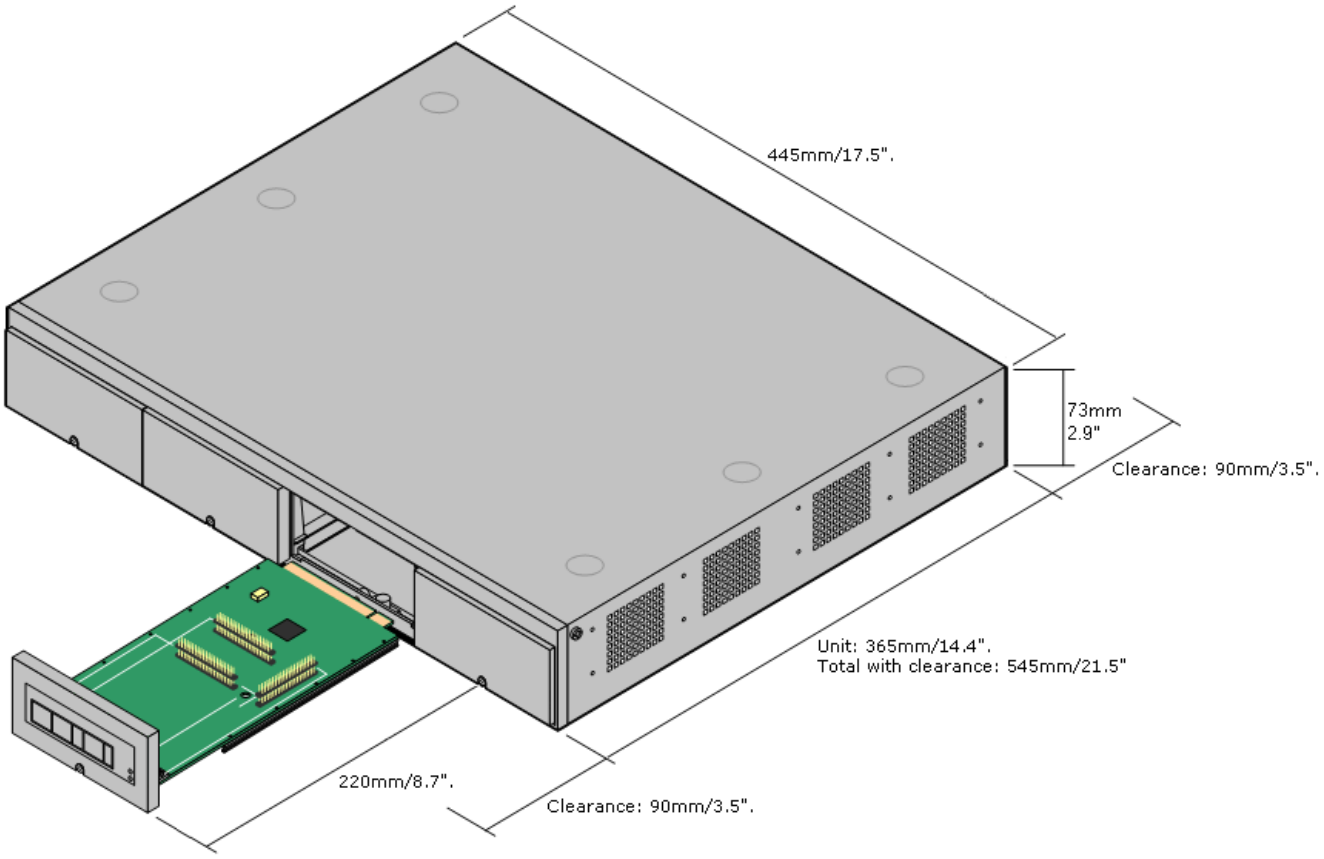

2.2.2 External Expansion Modules

The dimensions below are applicable to all IP Office external expansion modules.

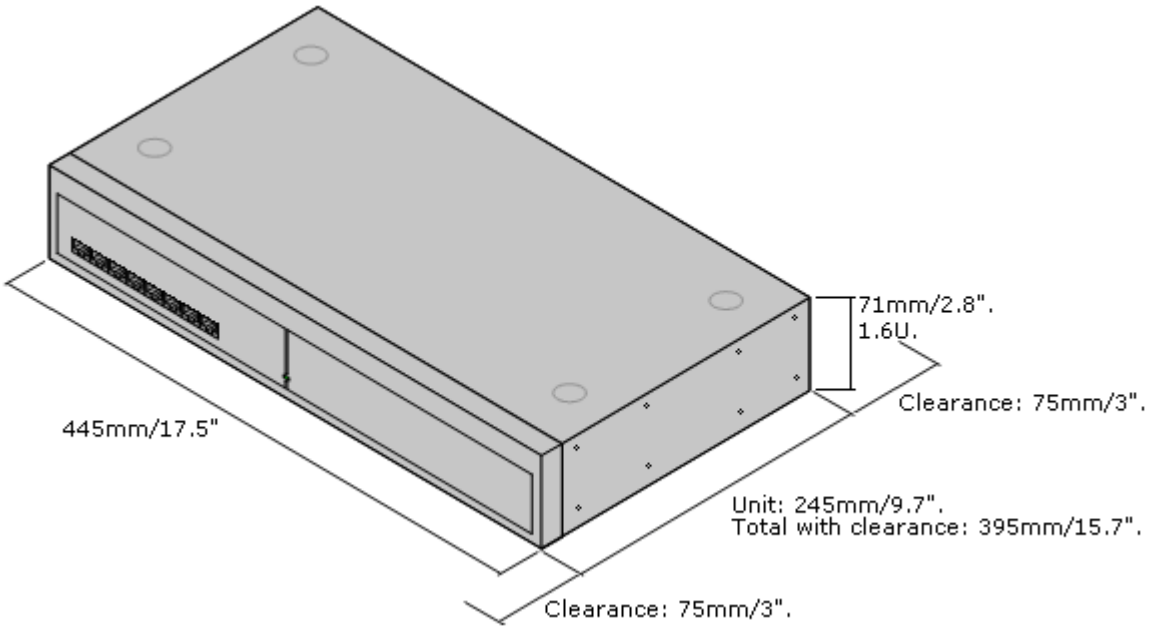

2.2.3 Wall Mounting

IP500, IP500 V2 control units and IP500 external expansion modules can be wall mounted. To do this, a wall mounting kit is required in addition to suitable wall fixings.

In addition to the existing environmental requirements 60 for an IP Office system, the following additional requirements apply when wall mounting a unit:

- The wall surface must be vertical, flat and vibration free. Attachment to temporary walls is not supported.
- Only the screws provided with the mounting kit should used to attach the brackets to the control unit.

The following wall mounting kits exist.

- **IPO IP500 RACK MNTG KIT V3** *(SAP Code 700503160)*
  IPO IP500 RACK MNTG KIT V2 *(SAP Code 700500923)*
  These kits can be used for wall and rack mounting of an IP500 or IP500 V2 control unit and IP500 external expansion modules. The kits incorporates cable routing at the front and rear of the unit. For wall mounted control units it allows orientation of the control unit base card slots to the left or to the right.

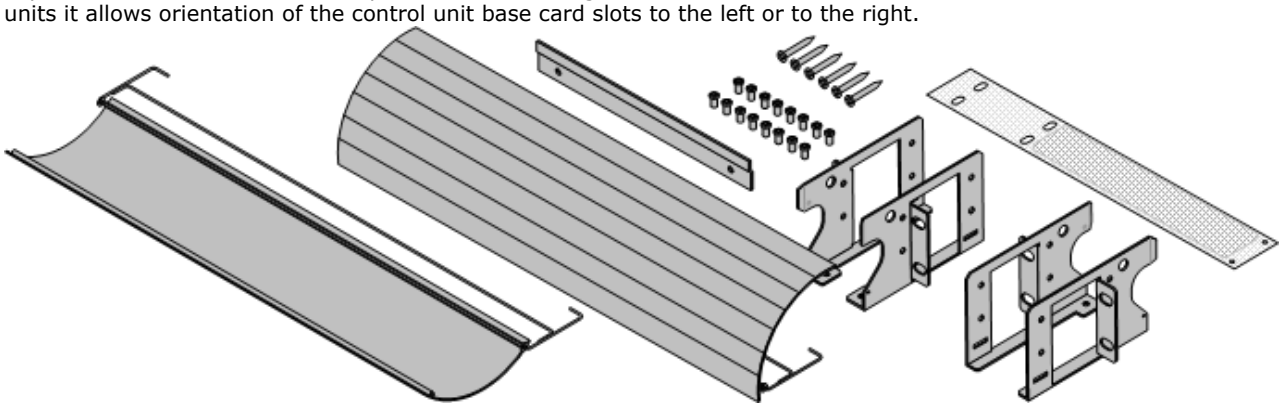

- **IPO IP500 WALL MNTG KIT** *(SAP Code 700430150)*
  This old design of wall mounting kit can be used for wall mounting an IP500 or IP500 V2 control units only. It does not provide any cable routing and requires the control unit to be mounted with the base card slots to the right only.

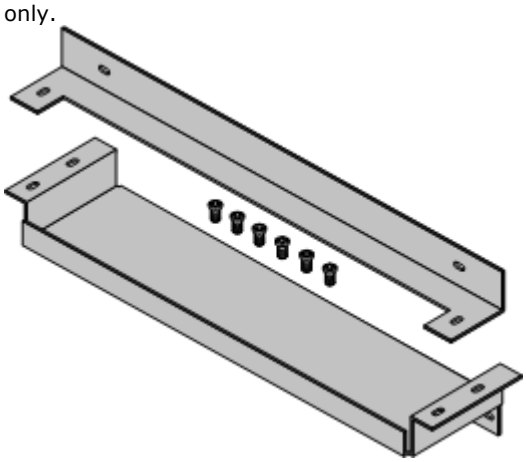

Wall Mounting Kit V2

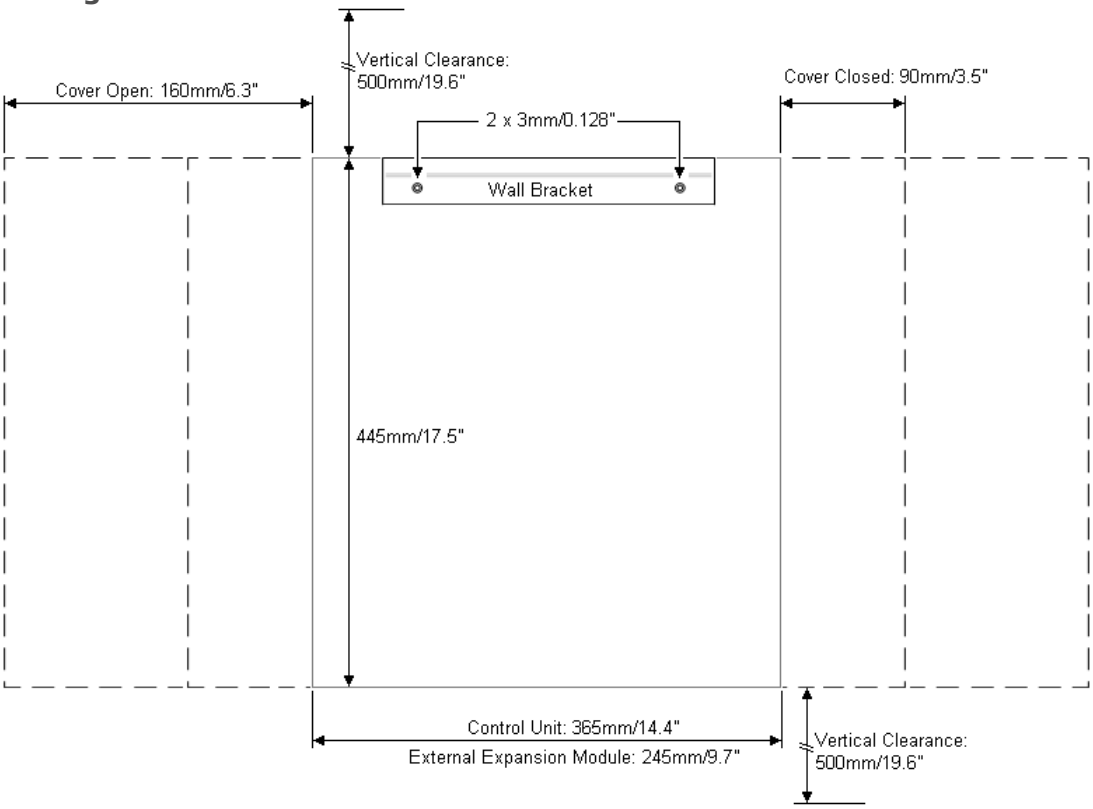

Wall Mounting Kit V1

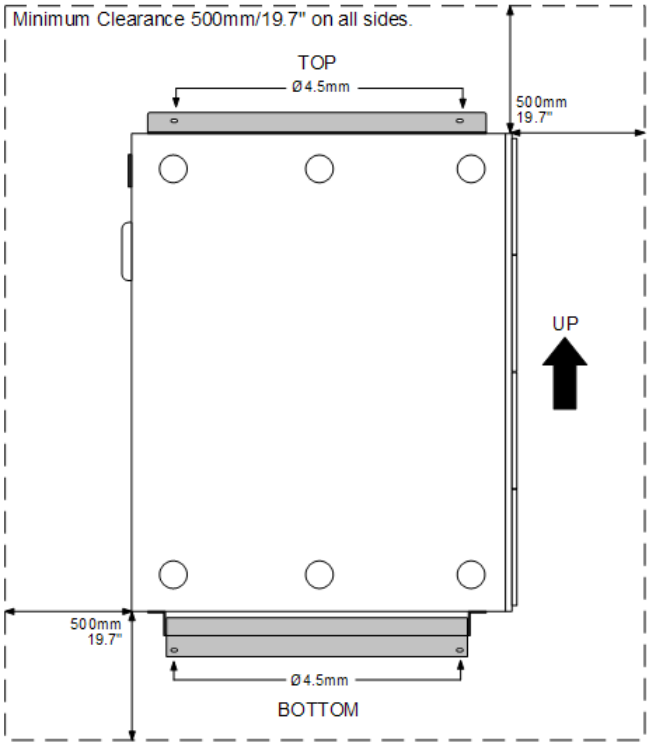

2.2.4 Rack Space Requirements

All IP Office control units and external expansion modules can be rack mounted into standard 19" rack systems. Each unit requires a 2U slot space within the rack. Rack mounting requires an IP400 or IPO IP500 RACK MNTG KIT for each control unit and external expansion module.

Where IP Office systems are being rack mounted, the effect of conditions within the rack cabinet must be considered. For example the rack temperature may be above the room temperature and airflow within the rack will be restricted. The environmental requirements 60 for the individual IP Office units are still applicable inside the rack cabinet.

Note that the new IPO IP500 RACK MNTG KIT V2 can also be used for rack mounting of units.

IPO IP500 RACK MNTG KIT

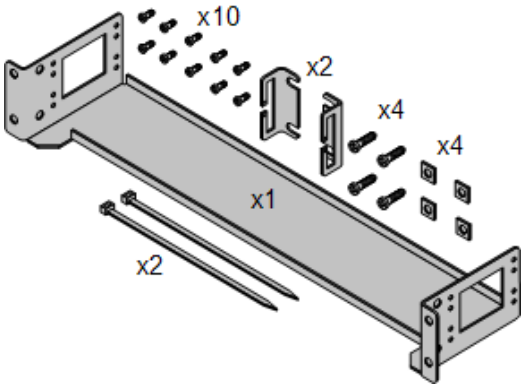

- **IPO IP500 RACK MNTG KIT** *(SAP 700429202)*
  This kit contains all the components required for the rack mounting of a single IP500 V2 control unit, IP500 control unit or IP500 external expansion module. This includes screws for fixing of the brackets to the module, bolts for securing the module in the rack and cable tidy brackets.

IP400 Rack Mounting Kit

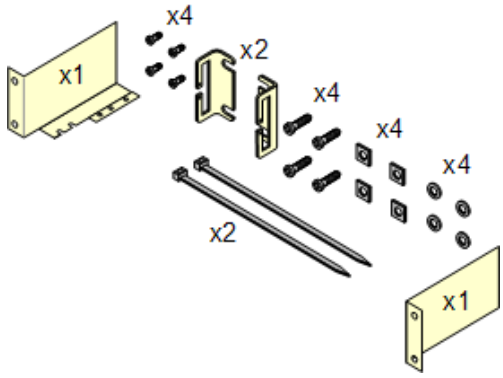

- **IP400 Rack Mounting Kit** *(SAP 700210800)*
  This kit contains all the components required for the rack mounting of a single control unit or expansion module. This includes screws for fixing of the brackets to the module and bolts for securing the module in the rack.

Barrier Box Rack Mounting Kit

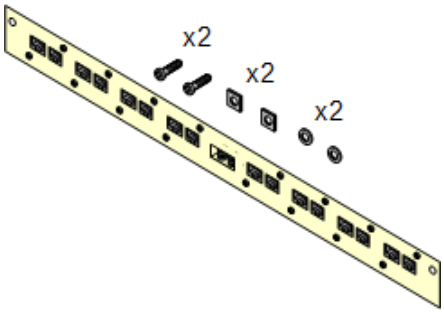

- **Barrier Box Rack Mounting Kit** *(SAP 700293905)*
  Barrier boxes must be used for out-of-building analog phone extensions 42. This bracket allows up to 8 IP Office barrier boxes to be rack mounted and simplifies the number of connections to the protective ground point in the rack. This kit must be used when more than 3 barrier boxes are in use and supports a maximum of 16 barrier boxes for a single external expansion module.

Rack Module Positioning

The integral expansion ports on a control unit are located on the rear of the unit. For IP500 and IP500 V2 control units, an additional 4 expansion ports can be added to the front of the control unit by installing an IP500 4-Port Expansion card.

- Each external expansion module is supplied with a blue 1 meter (3'3'') expansion interconnect cable. This cable must be used when connecting to expansion ports on the rear of a control unit.
- When connecting to expansion ports on an IP500 4-Port Expansion card, a yellow 2 meter (6'6") expansion interconnect cable can be used in place of the standard blue cable. 4 Yellow cables are supplied with the IP500 4-Port Expansion card.

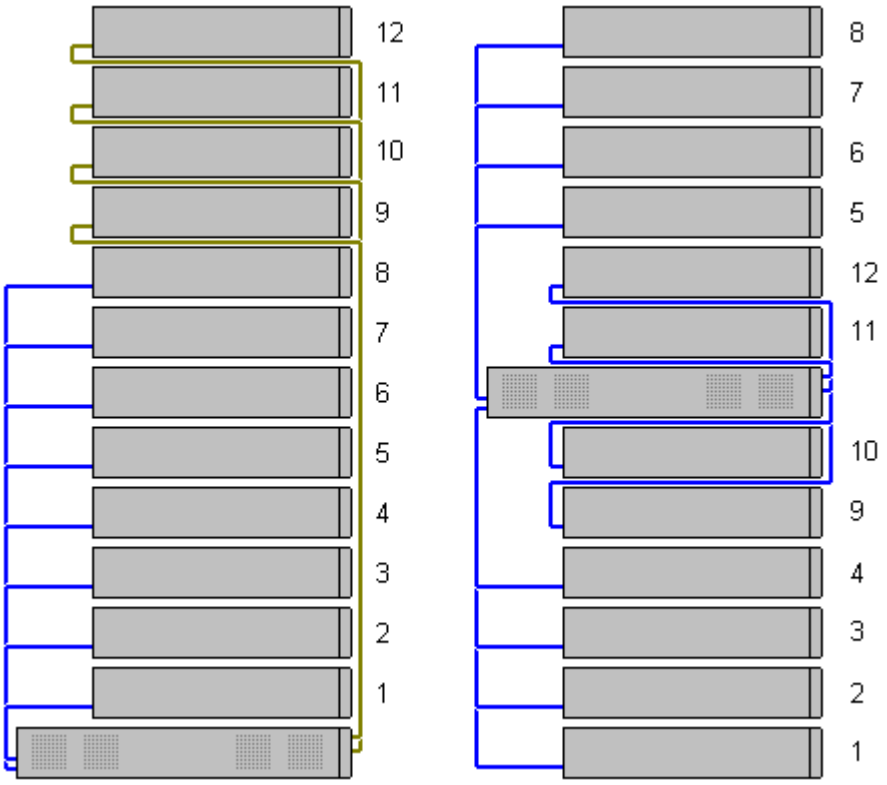

Chapter 3.
Administration Software

3. Administration Software

This chapter is currently set for standard mode only as it covers the thick clients.

In order to install and maintain an IP Office system you must be familiar with using the following applications.

- **IP Office Manager**
  IP Office Manager is used to access all parts of the IP Office configuration. Different levels of access can be defined to control which parts of the configuration Manager user can view and alter. Manager is also used to upgrade the software files used by an IP Office system.
- **System Status Application**
  The IP Office System Status application (SSA) is a reporting tool that provides a wide range of information about the current status of an IP Office system. Its can report the available resources and components within the system and details of calls in progress. Details of the number of alarms are recorded and the time date of the most recent alarms. When required for diagnostics escalation, SSA is able to take a snap shot image of the IP Office system's status including a copy of its current configuration. Use of SSA requires an IP Office service user name and password that has been configured for System Status access in the IP Office's security settings.
- **Monitor (System Monitor)**
  IP Office Monitor (also known as System Monitor) is a tool that can show all activity on the IP Office system in great detail. As a consequence, interpretation of Monitor traces requires a high-level of data and telephony protocol knowledge. However, all IP Office installers and maintainers must understand how to run Monitor when necessary as Avaya may request copies of Monitor traces to resolve support issues.

3.1 Administration Suite Applications

3.1.1 Installing the Admin Applications

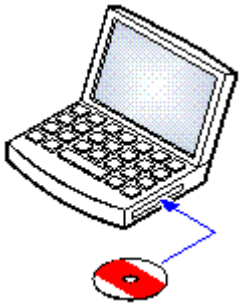

The IP Office Administration suite consists of a number of applications for IP Office installers and maintainers.

- ☐ **System Monitor** - *Install* ✓
- ☐ **Manager** - *Install* ✓
- ☐ **System Status Application** - *Install* ✓
- ☐ **Call Status** - *Optional*
  This software is not supported with IP Office Release 7.0 and higher systems. It is provided only for the maintenance of older systems.

Requirements

- ☐ **IP Office Release 8.1 User/Admin DVD Set (2) (700503230)**
  Alternatively the IP Office Administrator Applications suite can be downloaded from Avaya's support website *(http://support.avaya.com)*.
- ☐ **Windows PC Requirements**
  This should meet the requirements of the administrator applications being installed. The specification below are the minimum requirements for IP Office Manager. If other applications are to be installed on the PC then their individual requirements should also be meet.

Requirement	Minimum	Recommended
Processor	600MHz Pentium or AMD Opteron, AMD Athlon64, AMD Athlon XP.	800MHz Pentium or AMD Opteron, AMD Athlon64, AMD Athlon XP.
RAM	128MB	256MB
HD Space	1GB - 800MB for .NET2, 200MB for Manager.	1.4GB - 800MB for .NET2, 600MB for the full IP Office Admin suite.
Display	800 x 600 - 256 Colors	1024 x 768 - 16-bit High Color
Operating System	Supported on Windows XP Pro, Windows Vista, Windows 7, Windows 2003 and Windows 2008 R2. • 32-bit and 64-bit versions are supported. • Vista support is only on Business, Enterprise and Ultimate versions. • Windows 7 support is only on Professional, Enterprise and Ultimate versions.	

Installing the IP Office Admin Applications

1. Using the **Add or Remove Programs** option in the Windows Control Panel, check that the PC does not already have a version of the IP Office Admin suite installed.
   - If 'yes' and the suite is a pre-IP Office 3.2 version, remove the existing IP Office Admin suite via Add/Remove Programs.
   - If the existing suite is IP Office 3.2 or higher, it is possible to upgrade without removing the previous installation. However, if the system already has a USB Feature Key, the key should be removed prior to upgrading and then reinserted and the PC restarted.
2. Insert the IP Office Administrator Applications DVD. Select the option for the IP Office Administration Suit. A folder window will display the installation files for the administration suite.
3. Double-click on **setup.exe**.
4. Select the language you want to use for the installation process. This does not affect the language used by Manager when running. Click **Next >**.
5. Select who should be able to run the Admin Suite applications. Click **Next >**.
6. If required select the destination to which the applications should be installed. We recommend that you accept the default destination. Click **Next >**.
7. The next screen is used to select which applications in the suite should be installed. Clicking on each will display a description of the application. Click on the ▼ next to each application to change the installation selection. When you have selected the installations required, click **Next >**.

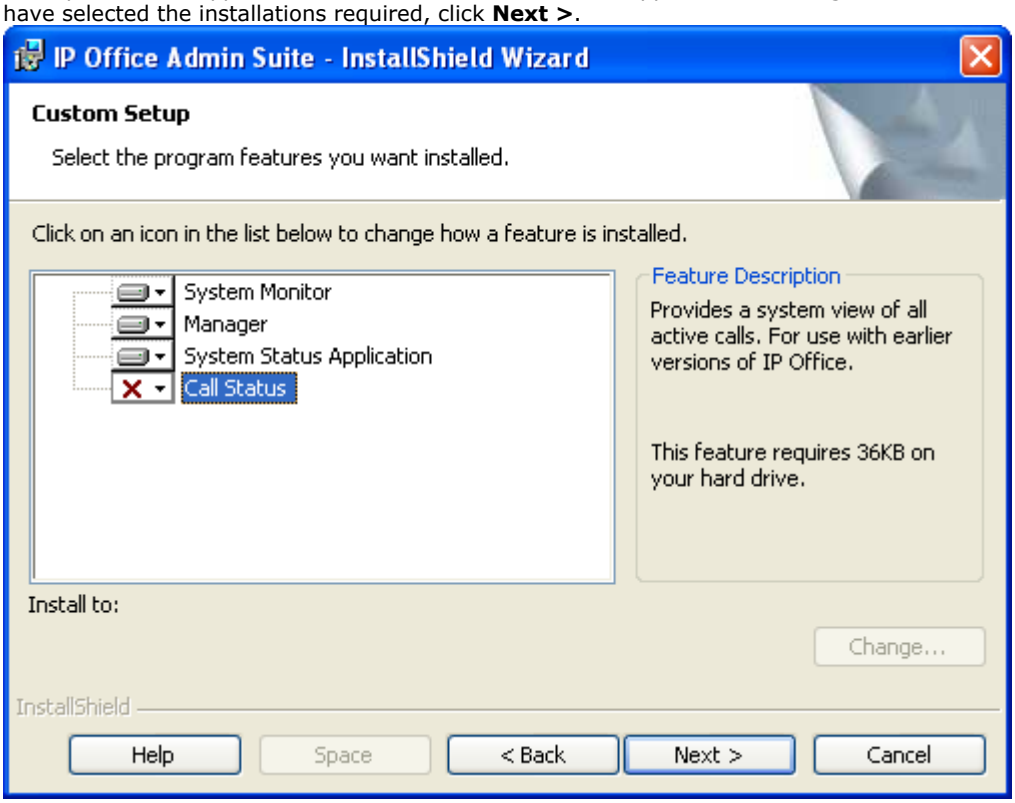

8. Ensure that at minimum **System Monitor** and **Manager** are selected. Click **Next >**.
9. Click **Install**.
10. Installation of Windows .Net2 components may be required. If dialogs for this appear, follow the prompts to install .Net.
11. If requested, reboot the PC.

3.1.2 Installer PC Connection

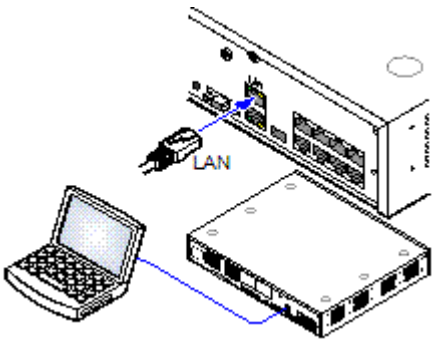

During installation it is recommended that the IP Office control unit is started without it being connected to any network. That ensure that the IP Office defaults to a known set of IP address settings.

If the IP Office is started connected to a network with a DHCP server. The programming PC will need to be connected to the same network as either a DHCP client or with an IP address valid for that network.

This section covers connecting your installation PC directly to the IP Office control unit.

Requirements

- ☐ **IP Office Administration PC**
  A Windows PC with the IP Office Administrator Application suite installed 69.
- ☐ **LAN Cable**

Direct Connection to a Defaulted IP Office Control Unit

1. The default address for an IP Office control unit LAN port is 192.168.42.1/255.255.255.0. To directly connect a PC, change the TCP/IP properties for the PCs LAN port to the following:

Fixed IP address	192.168.42.203
Subnet mask	255.255.255.0
Default gateway	192.168.42.1.

   - While setting the PC to be a DHCP client could be used, this is not recommended for performing more advanced functions such as firmware upgrades.
2. Connect the LAN cable from the PCs LAN port the LAN or LAN1 port on the IP Office control unit.
3. Check that the orange LED lamp on the IP Office LAN port is on. The green LED may also be flickering as it indicates traffic across the LAN connection.
4. To test the connection before running Manager or System Status Application:
   - Select **Start | Run** and enter ***cmd***.
   - In the command window that appears enter ping **192.168.42.1**. The results should show a number of ping replies from the IP Office. This confirms basic communication between the Manager PC and the IP Office.
   - If there are no ping replies enter **ipconfig**. The results should list the IP address settings of the Manager PC as required above. If they do enter **exit** and check the cable connection.
5. You can now start Manager 72, System Status 73 or System Monitor 74.

3.1.3 Starting IP Office Manager

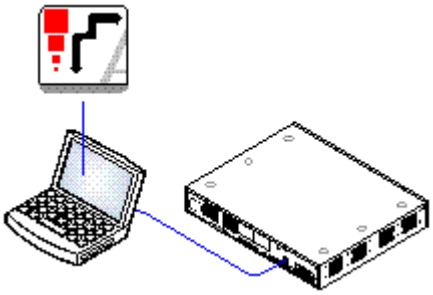

IP Office Manager is used to access all parts of the IP Office configuration. Manager can also be used to upgrade the software files used by an IP Office system.

Requirements

- ☐ **IP Office Administration PC**
  A Windows PC with the IP Office Administrator Application suite installed 69.
- ☐ **LAN Cable**

1. Select **Start | Programs | IP Office | Manager**.
2. If the PC has firewall software installed, you may be prompted as to whether you want to allow this program to access the network. Select **Yes** or **OK**.
3. Select **File | Open Configuration** from the menu bar.
4. The **Select IP Office** window appears. After a few seconds it should list the IP Office control unit. The default name used for a newly installed IP Office control unit is its MAC address.

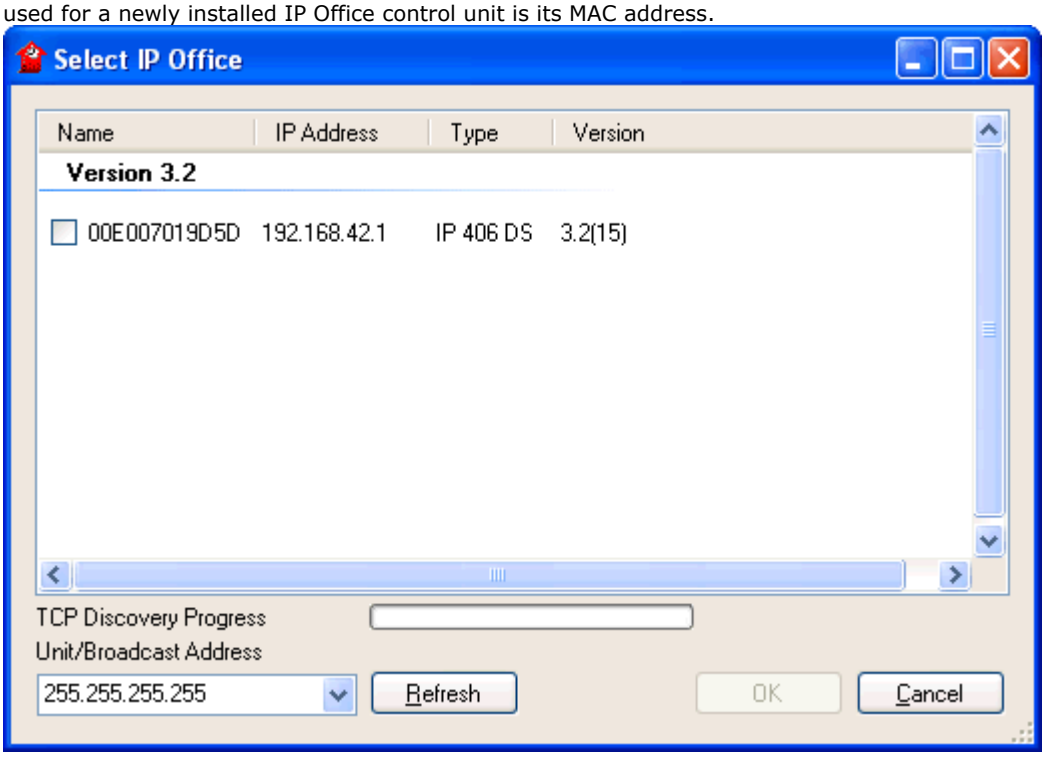

   - If the system required was not found, the address used for the search can be changed. Enter or select the required address in the **Unit/Broadcast Address** field and then click **Refresh** to perform a new search.

5. Click the check the box next to the system and then click **OK**.
6. The name and password request is displayed. The name and password must match one of those setup through the security settings. For a IP Office Essential Edition system, the default name and password for full configuration settings access are ***Administrator*** and ***Administrator***.

3.1.4 Starting System Status

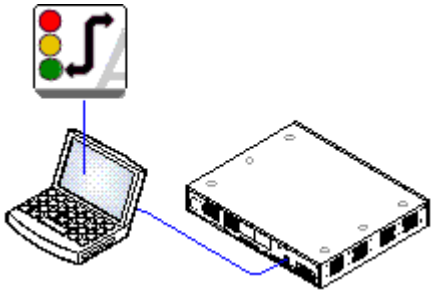

The IP Office System Status application (SSA) is a reporting tool that provides a wide range of information about the current status of an IP Office system. Its can report the available resources and components within the system and details of calls in progress. Details of the number of alarms are recorded and the time date of the most recent alarms.

When required for diagnostics escalation, SSA is able to take a snap shot image of the IP Office system's status including a copy of its current configuration. Use of SSA requires an IP Office service user name and password that has been configured for System Status access in the IP Office's security settings.

Requirements

- ☐ **IP Office Administration PC**
  A Windows PC with the IP Office Administrator Application suite installed 69.
- ☐ **LAN Cable**

1. There are several methods that can be used to start the IP Office System Status application.
   - On a PC where System Status has been installed, select **Start | Programs | IP Office | System Status**.
   - If Manager is also installed and is running, select **File | Advanced | System Status**.
   - For IP500 V2 controls units, start a web browse and enter the IP address of the control unit. Select the link for the System Status Application.
2. Once System Status has started, it will request the details of the IP Office system to which you want it to connect.

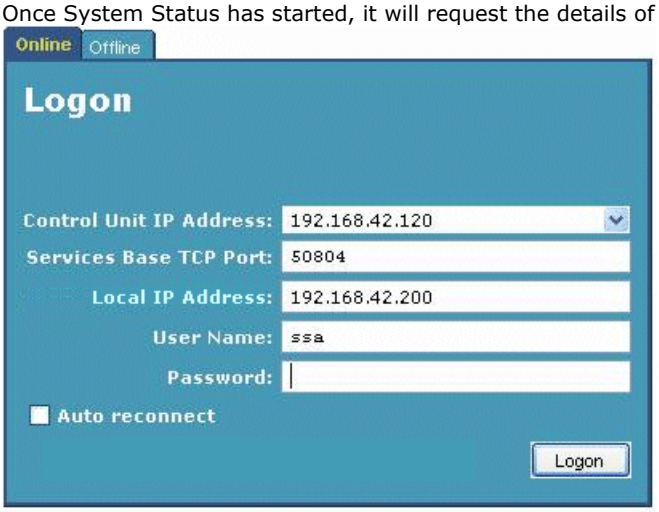

   - **Control Unit IP Address**
     Enter the IP address of the IP Office control units LAN interface or use the drop down to select a previously used address.
   - **Services Base TCP Port**
     This should match the Services Base TCP Port setting of the IP Office system, set in that systems security settings. The default is 50804.
   - **Local IP Address**
     If the PC has more than one IP address assigned to its network card or multiple network cards, the address to use can be selected if necessary. This allows System Status to be run on a PC that is already running an SSI connection to the IP Office for the IP Office Customer Call Reporter application.
   - **User Name/Password**
     Enter a user name and password that has been provided for System Status usage. By default this is the same as the user name and password used with IP Office Manager. This must be the name of an IP Office service user name that has been configured for system status access in the IP Office's security settings.
   - **Auto Reconnect**
     If selected, System Status will attempt to reconnect using the same settings if connection to the IP Office is lost.
3. Enter the required details for the IP Office and click **Logon**.

3.1.5 Starting Monitor

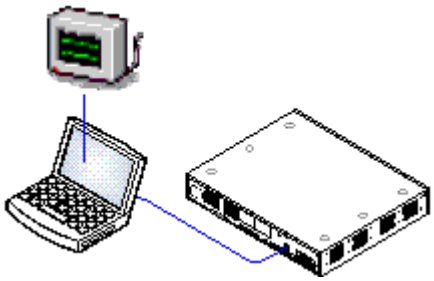

IP Office Monitor (also know as System Monitor) is a tool that can show all activity on the IP Office system in great detail. As a consequence, interpretation of Monitor traces requires a high-level of data and telephony protocol knowledge. However, all IP Office installers and maintainers must understand how to run Monitor when necessary as Avaya may request copies of Monitor traces to resolve support issues.

Requirements

- ☐ **IP Office Administration PC**
  A Windows PC with the IP Office Administrator Application suite installed 69.
- ☐ **LAN Cable**

1. Select **Start | Programs | IP Office | Monitor**.
2. If System Monitor has been run before it will attempt to connect with the system which it monitored previously. If otherwise or you want to monitor a different system use the steps below.
3. Select **File | Select Unit**.

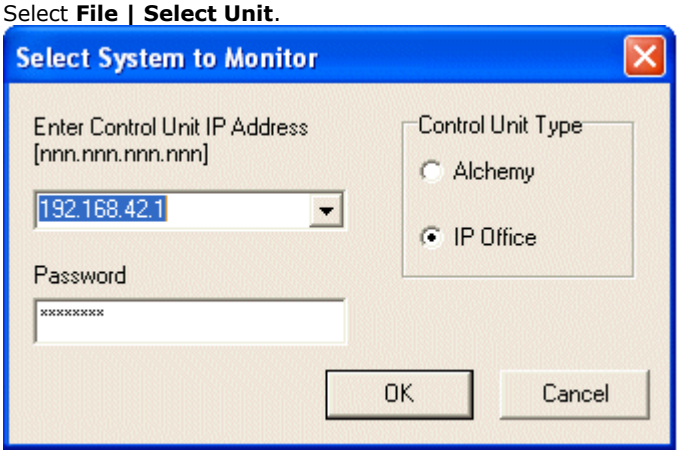

4. Enter the IP Office IP address and password of the IP Office Control Unit you want to monitor.
   - Using IP Office Manager it is possible to set a specific **System Monitor Password** for System Monitor access to an IP Office system. If the IP Office doesn't have a **System Monitor Password** set, System Monitor uses the IP Office's **System Password**. The System Monitor Password and System Password are both set within the IP Office system security settings.
   - For an IP Office system, ensure that the **Control Unit Type** is set to IP Office.
5. Click **OK**.

Chapter 4.
IP500 V2 Installation

4. IP500 V2 Installation

This installation process is a simple outline as installation requirements and processes will vary.

- In this process, all the IP Office hardware components are installed and connected without being switched on until the end of the process. The control unit will then upgrade all the connected components, including phones, to the appropriate level of firmware.
- Also when switched on, the system is not connected to the customers data network. This ensures that the control unit will default to known default IP address settings (unless you have pre-loaded the System SD card with a configuration file with different settings).

- **Tools and Parts Required** 77
  Check that you have the tools and additional parts required.
- **Documentation** 78
  Ensure that you have obtained and read all the relevant documentation.
- **Unpacking** 79
  Check that all the required equipment has been delivered and that there is no damage.
- **SD Card Preparation** 80
  Upgrade and pre-load the System SD card with a configuration and other files in order to speed up installation.
- **Install the Base Cards** 85
  Attach any trunk daughter cards to the IP500 base cards. Insert the cards into the control unit.
- **Wall Mounting** 89
  If wall mounting, attach the brackets and fit the unit to the wall.
- **Rack Mounting** 92
  If rack mounting, attach the brackets and fit the control unit into the rack.
- **Connect External Expansion Modules** 94
  Connect the external expansions modules to the control unit.
- **Grounding** 96
  Attach required ground cables to the control unit and external expansion modules.
- **LAN Network Connections** 97
  Attach the IP Office control unit and a PC with IP Office Manager to the LAN network.
- **Starting the System** 98
  Insert the System SD card and power up the system.
- **Changing the System to IP Office Essential Edition** 101
  IP500 V2 systems installed in IP Office Basic Edition - Quick Mode can be changed to operate in IP Office Essential Edition.
- **Connecting Phones** 103
  Connect the Avaya digital phones.

4.1 Tools and Equipment Required

The following is a general summary of the tools required. Additional tools and equipment will be required for wall and or rack mounting and to fashion ground cable connections suitable to local requirements.

- **Tools Required**
  - ☐ 5mm Flat-blade screwdriver.
  - ☐ Crosshead screwdriver.
  - ☐ Anti-static wrist strap and ground point.
  - ☐ RJ45-RJ45 Ethernet LAN Cable.
  - ☐ M4 Cross-Head Screwdriver.
  - ☐ Tools suitable for crimping a cable spade.
  - ☐ If wall mounting, drills and tools for wall mounting fixtures.

- **Additional Parts Required**
  In addition to orderable IP Office equipment, the following items will be required.
  - ☐ 14AWG Solid copper wire for ground connection of control units and expansion modules.
  - ☐ Cable sleeve matching local regulator requirements for ground wires. Typically green for a functional ground and green/yellow for a protective ground.
  - ☐ If wall mounting, additional fixtures and fittings suitable for the wall type and mounting kit being used.
  - ☐ Cable ties and labels for tidying and identifying cables.

- **System Administration**
  1. ☐ Selected method for system administration:
     - Windows PC with IP Office Admin suite installed 69 and RJ45 Ethernet LAN port.
  2. ☐ SD Card reader.

4.2 Documentation

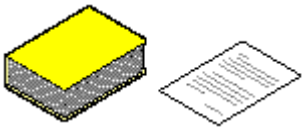

Ensure that you have read this manual in full before starting installation. Also include the installation documentation for any other equipment and applications being installed as part of the IP Office system.

- **! IP Office Technical Bulletins**
  Ensure that you have obtained and read the IP Office Technical Bulletin relating to the IP Office software release which you are installing. This bulletin will contain important information that may not have been included in this manual. IP Office Technical Bulletins are available from the Avaya support website *(http://support.avaya.com)*.

- **! Upgrade Licenses**
  Some upgrades may require entry of upgrade licenses. It is still possible to upgrade the system without the necessary licenses, however the system will not provide any telephony functions after the upgrade until the appropriate license is added to the system configuration.

- **1100/1200 Series Phone Installation.**
- **one-X Portal for IP Office Installation.**
- **Avaya H323 IP Phone Installation.**
- **Embedded Voicemail Installation.**
- **Voicemail Pro Installation.**
- **Contact Store Installation.**
- **Compact DECT Installation.**
- **IP DECT R4 Installation.**
- **3600 Series Wireless IP Installation.**
- **SoftConsole Installation Manual.**
- **SIP Extension Configuration.**

Information Web Sites

IP Office documentation is available from the following web sites.

- **Avaya Support** *(http://support.avaya.com)*
  Contains documentation and other support materials for Avaya products including IP Office. Copies of the IP Office CD images are available from this site and updated core software .bin files.

- **Avaya IP Office Knowledge Base** *(http://marketingtools.avaya.com/knowledgebase)*
  Access to an on-line regularly updated version of the IP Office Knowledge Base.

4.3 Unpacking

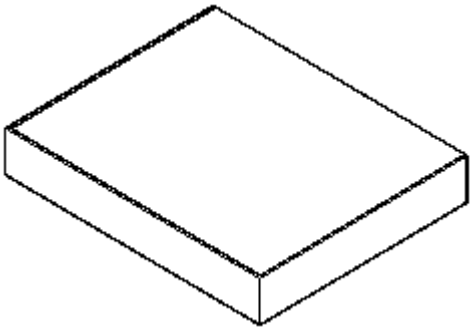

Use the following procedure when unpacking any equipment supplied by Avaya or an Avaya reseller or distributor.

Information Required

- ☐ **Equipment Checklist**.
  An installation checklist of the parts and equipment ordered for the installation.

Procedure

1. ☐ **Check for Packaging Damage**
   Before unpacking any equipment, check for any signs of damage that may have occurred during transit. If any damage exists bring it to the attention of the carrier.
2. ☐ **Check the Correct Parts Have Been Delivered**
   Check all cartons against the packing slip and ensure that you have the correct items. Report any errors or omissions to the equipment supplier.
3. ☐ **Retain All Packaging and Documentation**
   While unpacking the equipment, retain all the packaging material. Fault returns are accepted only if repackaged in the original packaging. If performing a staged installation, the original packaging will also assist when repacking equipment to be moved to the final install site.
4. ☐ **Ensure that Anti-Static Protection Measures are Observed**
   Ensure that anti-static protection measures are observed at all times when handling equipment with exposed electrical circuit boards.
5. ☐ **Check All Parts**
   Visually inspect each item and check that all the necessary documentation and accessory items have been included. Report any errors or omissions to the dealer who supplied the equipment.
6. ☐ **Check All Documentation**
   Ensure that you read and retain any documentation included with the equipment.

4.4 SD Card Preparation

IP500 V2 control units are supplied with no installed firmware or configuration. When first powered up, the control unit will load and install the necessary firmware from the **System SD** card installed in it. It will then create a default configuration matching the cards installed in the control unit and external expansion modules attached to it.

You can perform a number of additional actions prior to installing the System SD card in order to pre configure the IP Office system.

- **Upgrade the Card Firmware** 81
- **Add a Configuration File** 83
- **Add a License File** 83
- **Add Music on Hold Files** 84
- **Add a 9600 Screen Saver Image File** 83

Additional actions that can be performed on SD cards are detailed in the SD Card Management 162 section.

4.4.1 Upgrade the Card Firmware

This command can be used with a read-writeable SD card on the Manager PC. It copies the files and folders used by an IP500 V2 system when starting. It updates the card with the version of those files installed with the IP Office Manager application. It includes the binary files for the IP500 V2 system, external expansion modules and phones. It also includes the prompt files for Embedded Voicemail operation.

This process replaces existing files and adds new files. It does not delete files, so for example, any existing Embedded Voicemail messages and greetings are retained. If the card contains dynamic system files such as SMDR records, they are temporarily backed up by Manager and then restored after the card is recreated.

For the card to be used in an IP500 V2 system's **System SD** slot the card must be Avaya SD Feature Key card. The card must be correctly formatted, however a reformat of an existing working card is not necessary before using recreate to update the card contents.

- The source for the files copied to the SD card are the sub-folders of the ***\Memory Cards*** folder under Manager's **Working Directory** (normally ***C:\Program Files Avaya\IP Office\Manager***). However, if the Working Directory is changed to a location without an appropriate set of ***\Memory Cards*** sub-folders, the required set of files will not be copied onto the SD card.

Upgrading a System SD Card

1. Once started do not interrupt this process, for example by removing the SD card. This process takes approximately 15 minutes.
2. Insert the SD card into a card reader on the Manager PC.
3. Using IP Office Manager, select **File | Advanced | Recreate IP Office SD Card**.
4. Select **IP Office A-Law**, **IP Office U-Law**, **IP Office Partner Edition**. or **IP Office Norstar Edition**. This selection will affect how the IP Office systems operates when defaulted with this card present in its **System SD** card slot.
5. Browse to the card location and click **OK**.
6. IP Office Manager will prompt whether you want to include Avaya IP Office Web Manager files as part of the recreate process. Those files are necessary if you want to run IP Office Web Manager to manage the IP Office system into which the card will be loaded or if you want to use on-boarding 122.
7. Manager will start creating folders on the SD card and copying the required files into those folders. This process will take approximately 15 minutes.
8. Do not remove the SD card during the process. Wait until the Manager displays a message.

4.4.2 Creating an Offline Configuration File

IP Office Manager can be used to create a new configuration without connecting to an IP Office system. During the process, you can specify the locale of the system, what type of trunk cards it uses and what type of control unit and expansion modules to include.

This allows the creation of a configuration prior to installation of system. The configuration file can be placed onto the System SD card 83 before it is installed into the system. Otherwise the configuration can be uploaded to the system using Manager after initial installation of the system.

- The configuration created must match the physical equipment in the IP Office system onto which the configuration will be loaded. Doing otherwise may cause the IP Office system to reset and experience other problems.

Creating an Offline Configuration

1. Start IP Office Manager with no configuration loaded into Manager
2. Click on **Create an Offline Configuration** in the simplified view.

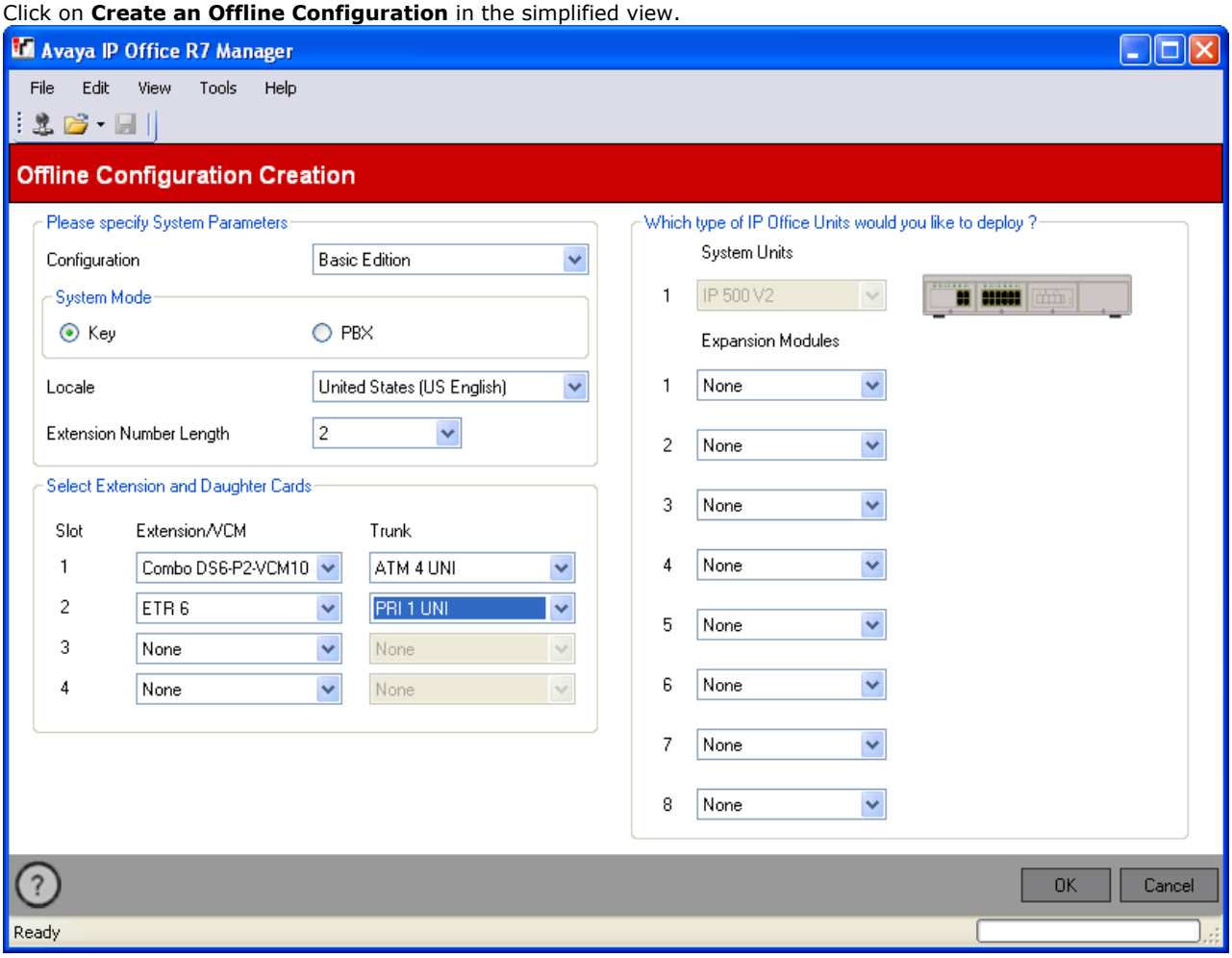

3. Select the type of configuration that you want to create. The equipment and settings will be restricted to those supported in the selected mode.
4. When completed click **OK**.
5. Manager will create and load the configuration.
6. Edit the configuration to match the customer requirements. This can include importing information from preprepared CSV files.
7. When completed, select **File | Save Configuration As**.

4.4.3 Adding a Pre-Built Configuration File

IP Office Manager can be used to create an offline configuration file 82. For IP500 V2 control units, such a pre-created IP Office configuration file can be placed on the System SD card. That file will then be used when the IP Office system is started.

Loading a Pre-Built Configuration onto a System SD Card

1. Using IP Office, create an offline configuration that matches the customer requirements and the equipment that will be installed in the IP Office.
2. Rename the configuration file ***config.cfg***.
3. Using a card reader, copy the file into the ***/system/primary*** folder on the System SD memory card.

4.4.4 Adding a License File

For IP500 V2 control units, if a licence file called **keys.txt** is found in the SD card folder which the IP Office uses when it boots, the IP Office will merge the licenses in that file with its configuration.

The files should be a plain text file (UTF8) containing either:

- A license name and license key separated by a comma on each line.

```
Teleworker, uAuToY@9VvVV@VOzIgeegwLXL2sAs1Z5
Mobile Worker, NvWO_iVY5KJpZMNeY89IB1sIj0_QUCDm
Power User, 9IJQW3yuPsbxjGS2XcMa16_J9H8cSeZ9
System Advanced, JAWZaw@YtK37vcnXkqM4mDYDIdSMd9_1
```

- A license key on each line.

```
uAuToY@9VvVV@VOzIgeegwLXL2sAs1Z5
NvWO_iVY5KJpZMNeY89IB1sIj0_QUCDm
9IJQW3yuPsbxjGS2XcMa16_J9H8cSeZ9
JAWZaw@YtK37vcnXkqM4mDYDIdSMd9_1
```

Loading a License File onto a System SD Card

1. Using a card reader, copy the file into the ***/system/primary*** folder on the System SD memory card.

4.4.5 Adding a 9600 Series Screen Saver File

When idle, 9600 Series phones can timeout to displaying a screen saver image. A file, ***96xxiposs.jpg***, is present on the cards by default.

You can replace this file with your own branded file. The file should be smaller than the screen size on 9600 Series phones in order to then be moved around the screen.

Phone	Maximum Size	Phone	Maximum Size	Phone	Maximum Size
9620	232 x 69	**9621G**	350 x 153	**9641G**	480 x 272
9620L	232 x 69	**9630**	232 x 140	**9650**	232 x 140
9620C	232 x 69	**9640**	232 x 140	**9650C**	232 x 140

- Color Displays: Color depth is 16 bit. A separate color image will look best.
- Non-Color Displays: Best results are achieved with a single grayscale logo image. 2 levels of grayscale are also supported.
- To invoke transparent backgrounds with logos, use a background color of 0,255,0 (brightest possible green).

4.4.6 Adding Music on Hold Files

By default the IP Office will use internal music on hold by uploading a music file from the IP Office Manager PC. For IP500 V2 systems, you can load a file onto the System SD card prior to installing it in the IP Office.

The file must be of the following format and must be called ***holdmusic.wav***.

Property	Value
File Type	WAV
Bit Rate	128kbps
Audio sample size	16 bit
Channels	1 (mono)
Audio Sample Rate	8 kHz
Audio Format	PCM
Length	Up to 90 seconds.

Loading a Music on Hold File onto a System SD Card

1. Rename the music file ***holdmusic.wav***.
2. Using a card reader, copy the file into the ***/system/primary*** folder on the System SD memory card.
3. If the IP Office is or will be configured for additional hold music files (up to 3 additional files), copy those files to the same location. The name of the additional files must match those specified in the IP Office system's configuration.

4.5 IP500 Card Installation

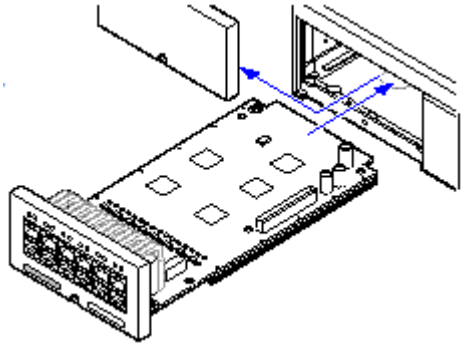

The IP500 base cards and trunk daughter cards should be fitted before power is applied to the control unit. Ensure that cards are inserted in the order that matches the planned or pre-built configuration.

1. Fitting IP500 Trunk Daughter Cards to the Base Cards. 86
2. Fitting IP400 Legacy Cards to a Legacy Card Carrier. 87
3. Installing IP500 Cards into the Control Unit. 88

- **Warnings**
  - Correct anti-static protection steps should be taken before handling circuit boards.
  - Cards must never be added or removed from the control unit while it has power connected.

- **General Notes**
  - Cards can be fitted in any order into any available slots. The only exception is the IP500 4-Port Expansion card which can only be installed in right hand slot 4.
  - It is recommended that cards are fitted from left to right.
  - There are restrictions to the number of supported cards of some types. When such a limit is exceed, the right-most card of that type will not function.
  - Ensure that you use the labels supplied to identify the card fitted into the control unit.

4.5.1 IP500 Daughter Card Preparation

IP500 trunk daughter cards can be fitted to any IP500 base card except the IP500 Legacy Card Carrier. For IP500 Combination cards, the trunk daughter card is pre-installed and cannot be changed.

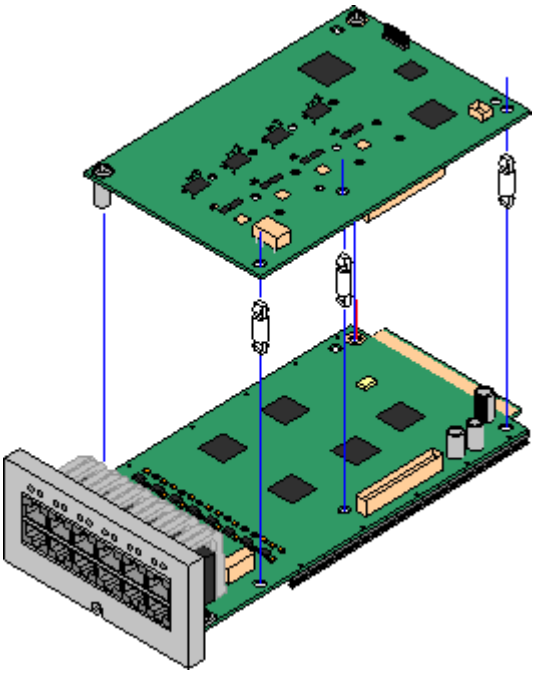

Warnings

1. Correct anti-static protection steps should be taken while handling circuit boards.

Parts and Equipment Required

1. ☐ **IP500 Base Card** (except the IP500 Legacy Card Carrier).
2. ☐ **IP500 Trunk Daughter Card**
3. ☐ **3 Stand Off Pillars**
   These are supplied with the trunk daughter card.

Tools Required.

1. ☐ 5mm Flat-blade screwdriver.
2. ☐ Anti-static wrist strap and ground point.

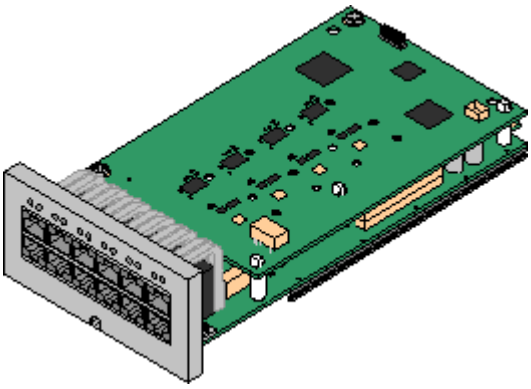

Procedure: Installing a Trunk Daughter Card

1. Check that correct cards have been supplied.
2. Ensure that you are wearing an anti-static wrist strap connected to a suitable ground point.
3. On the base card identify the position of 3 holes for the plastic pillars for the IP500 card. These are along the same edge as the card connector.
4. Fit the stand off pillars to the IP500 base card.
5. If there is a clip-on metal shield over the connector block on the base card, remove it.
6. Using minimal force and checking that the pins are correctly located, push the IP500 trunk card onto its connector block and the stand off pillars.
7. Check that the card connector has snapped into position.
8. Using the washers and screws provided, secure the metal stand off pillars to the base card.
9. A set of labels are supplied with the trunk daughter card. Fit the appropriate label to the front of the base card.

4.5.2 IP500 Legacy Card Preparation

An IP500 Legacy Carrier card can be used to fit IP400 trunk or VCM cards into an IP500 or IP500 V2 control unit. Up to 2 IP500 legacy carrier cards can be inserted.

- ✓ PRI T1
- ✓ Dual PRI T1
- ✓ PRI 30 E1 (1.4)
- ✓ Dual PRI E1
- ✓ PRI 30 E1R2 RJ45
- ✓ Dual PRI E1R2 RJ45
- ✓ BRI-8 (UNI)
- ✓ ANLG 4 Uni (US only)
- ✓ VCM 4
- ✓ VCM 8
- ✓ VCM 16
- ✓ VCM 24
- ✓ VCM 30

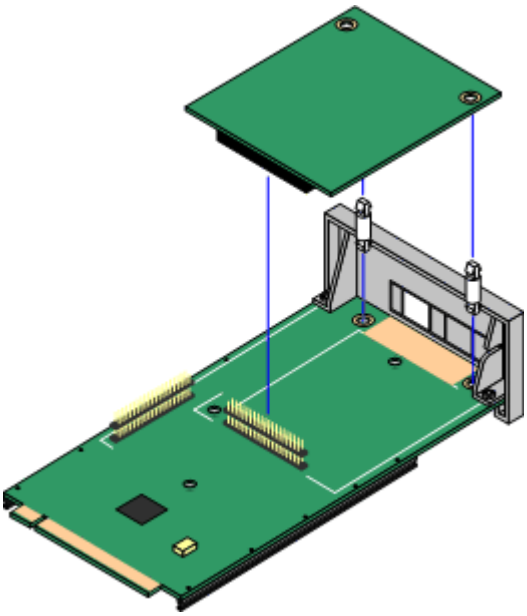

Warnings

1. Correct anti-static protection steps should be taken while handling circuit boards.

Parts and Equipment Required

1. ☐ **IP500 Carrier Card**
2. ☐ **IP400 Card**
   The table opposite lists supported cards. Any card not listed is not supported. Cards are supplied with 2 plastic stand off pillars. Trunk cards are also supplied with a replacement blanking plate which is not required.

Tools Required

1. ☐ 5mm Flat-blade screwdriver.
2. ☐ Anti-static wrist strap and ground point.

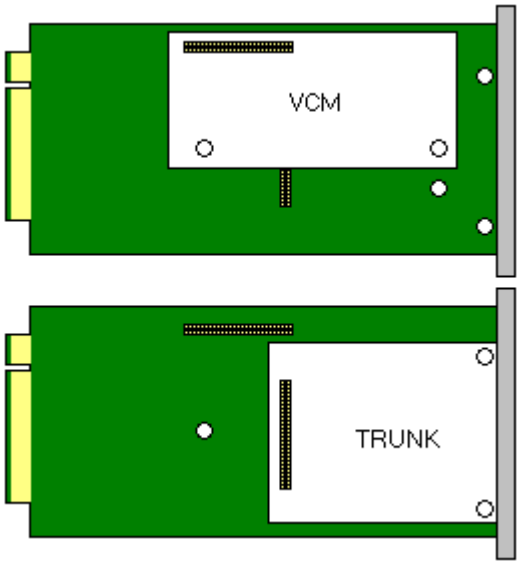

Procedure: Installing a Carrier Card

1. Check that correct cards have been supplied.
2. Ensure that you are wearing an anti-static wrist strap connected to a suitable ground point.
3. On the carrier card identify the position of the jumper block and stand off pillar holes for the IP400 card. The peg holes are labeled as VCM or TRUNK.
4. If fitting an IP400 trunk card, identify which of the plastic snap-off panels on the front of the carrier card need to be removed to allow the trunk cable connections. Carefully remove those panels.

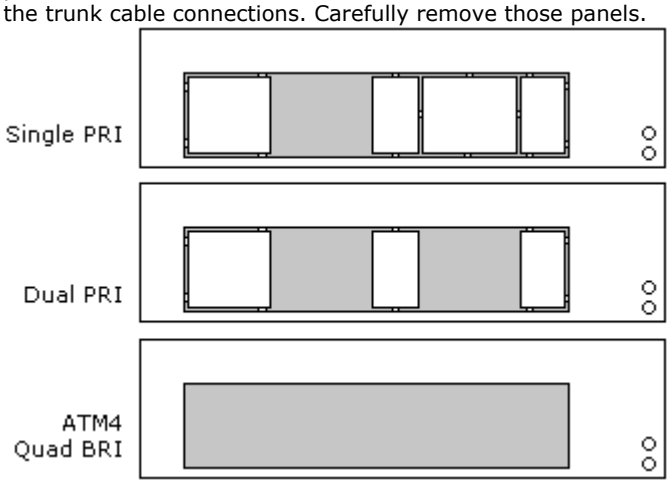

5. Fit the stand off pillars to the IP500 carrier card.
6. Using minimal force and checking that the pins are correctly located, push the IP400 card onto its jumper and the stand off pillars.

4.5.3 IP500 Card Insertion

Having prepared each IP500 base card by adding any trunk daughter card 86 or IP400 legacy card 87, the base card can be inserted into the control unit.

- **Warnings**
  - Correct anti-static protection steps should be taken while handling circuit boards.
  - Cards must never be added or removed from the control unit while it has power connected.

- **Tools Required**
  - ☐ 5mm Flat-blade screwdriver.
  - ☐ Anti-static wrist strap and ground point.

Installing an IP500 Card

1. Check that there is no power to the control unit.
2. Using a flat-bladed screwdriver, remove the cover from the slot on the front of the control unit that will be used for each card being installed. This cover is no longer required but should be retained until installation has been completed.

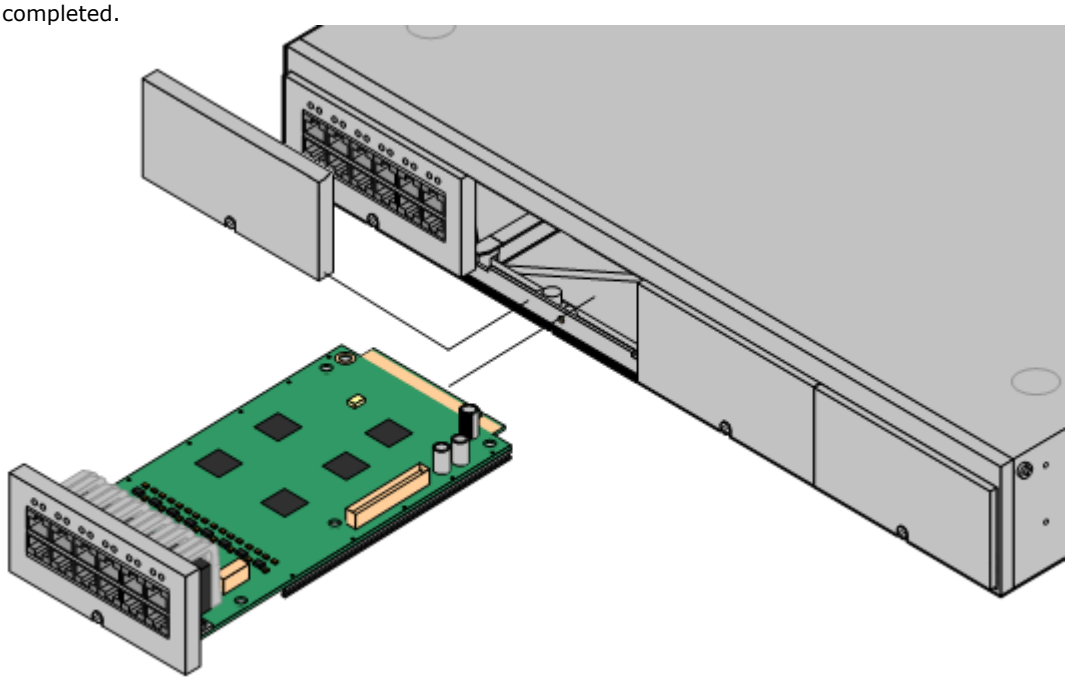

3. Allowing the card to rest against the bottom of the slot, begin sliding it into the control unit. When half inserted, check that the card rails have engaged with the slot edges by trying to gently rotate it. If the card rotates remove it and begin inserting it again.
4. The card should slide in freely until almost fully inserted. At this point apply pressure at the base of the front of the card to complete insertion.
5. Using a flat-bladed screwdriver secure the card.

4.6 Wall Mounting

IP500, IP500 V2 control units and IP500 external expansion modules can be wall mounted. To do this, a wall mounting kit is required in addition to suitable wall fixings.

In addition to the existing environmental requirements 60 for an IP Office system, the following additional requirements apply when wall mounting a unit:

- The wall surface must be vertical, flat and vibration free. Attachment to temporary walls is not supported.
- Only the screws provided with the mounting kit should used to attach the brackets to the control unit.

The following wall mounting kits exist.

- **IPO IP500 RACK MNTG KIT V3** *(SAP Code 700503160)*
  IPO IP500 RACK MNTG KIT V2 *(SAP Code 700500923)*
  These kits can be used for wall and rack mounting of an IP500 or IP500 V2 control unit and IP500 external expansion modules. The kits incorporates cable routing at the front and rear of the unit. For wall mounted control units it allows orientation of the control unit base card slots to the left or to the right.

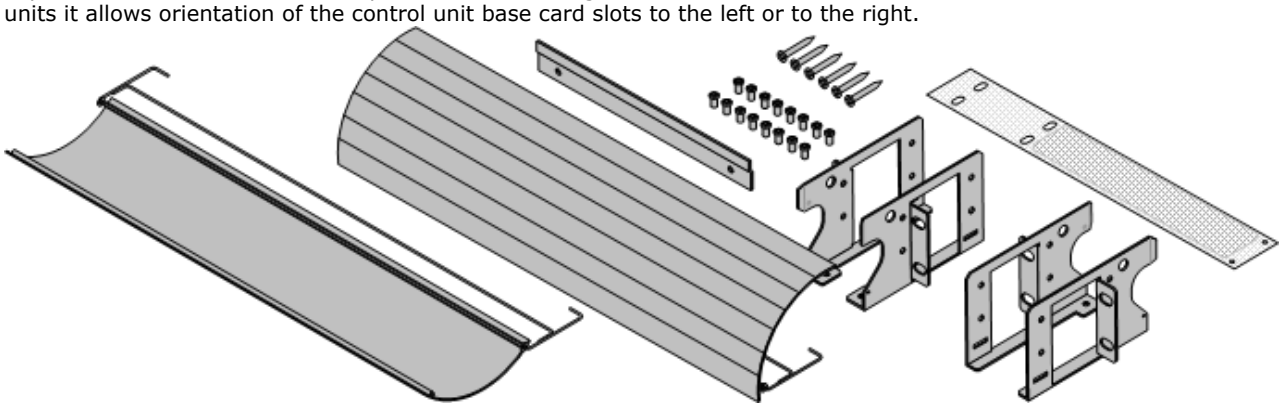

- **IPO IP500 WALL MNTG KIT** *(SAP Code 700430150)*
  This old design of wall mounting kit can be used for wall mounting an IP500 or IP500 V2 control units only. It does not provide any cable routing and requires the control unit to be mounted with the base card slots to the right only.

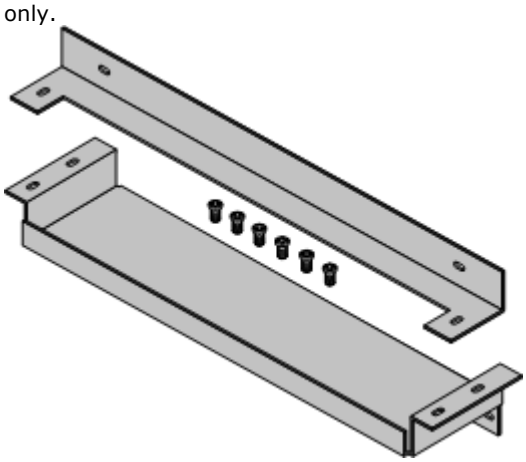

4.6.1 Wall Mounting Kit V2/V3

These notes relate to the **IPO IP500 RACK MNTG KIT V2** *(SAP 700500923)* and **IPO IP500 RACK MNTG KIT V3** *(SAP 700503160)*. These kits can be used to wall or rack mountIP500v2 control units and IP500 external expansion modules.

The kits includes all components necessary for wall mounting onto a plywood surface. The use of the cable covers is optional.

In addition to the existing environmental requirements 60 for an IP Office system, the following additional requirements apply when wall mounting a unit:

- The wall surface must be vertical, flat and vibration free. Attachment to temporary walls is not supported.
- Only the screws provided with the mounting kit should used to attach the brackets to the control unit.
- The installation must be done by a service person only.
- For control units, the mesh flame screen must be installed on the bottom edge of the control unit before mounting.
  - For the V3 kit, the flame screen attaches to the outside of the control unit.
  - For the V2 kit, the flame screen is inserted inside the control unit chassis. To do this you must wait at least 15 minutes after removing the power cord before fitting the flame screen.
- Ensure that the system has been shutdown and power has been removed from all the units. Shutdown the system using a shutdown command and then remove power. Do not simply remove the power.
- A suitable mounting surface of at least 19mm (0.75 inch) plywood is required.
- Full installation instructions are included with the kit.

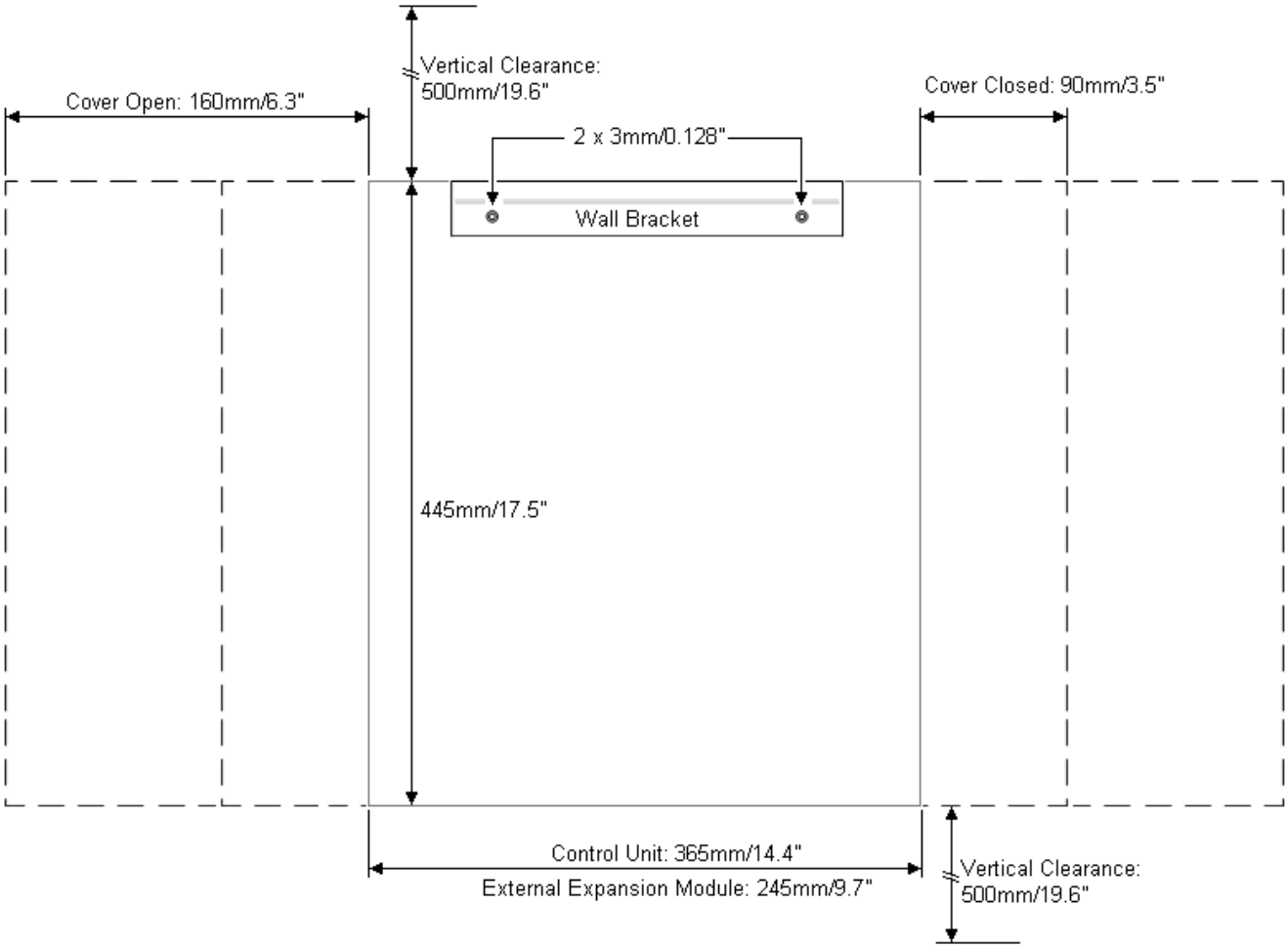

4.6.2 Wall Mounting Kit V1

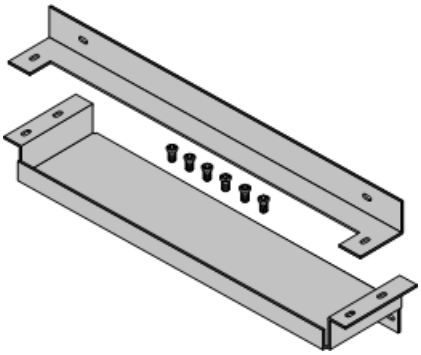

These notes relate to the older design of wall mounting kit *(SAP 70043015)* used for IP500 and IP500 V2 control units. This kit cannot be used for external expansion modules.

The kit includes two brackets, one top and one bottom, and screws for attachment to the control unit. Additional 4 x 4.5mm fixtures and fittings are required suitable for the wall type.

In addition to the existing environmental requirements 60 for an IP Office system, the following additional requirements apply when wall mounting a unit:

- The wall surface must be vertical, flat and vibration free. Attachment to temporary walls is not supported.
- Only the screws provided with the mounting kit should used to attach the brackets to the control unit.
- The brackets must be used as shown, with the deeper tray-like bracket used at the bottom of the wall mounted control unit.

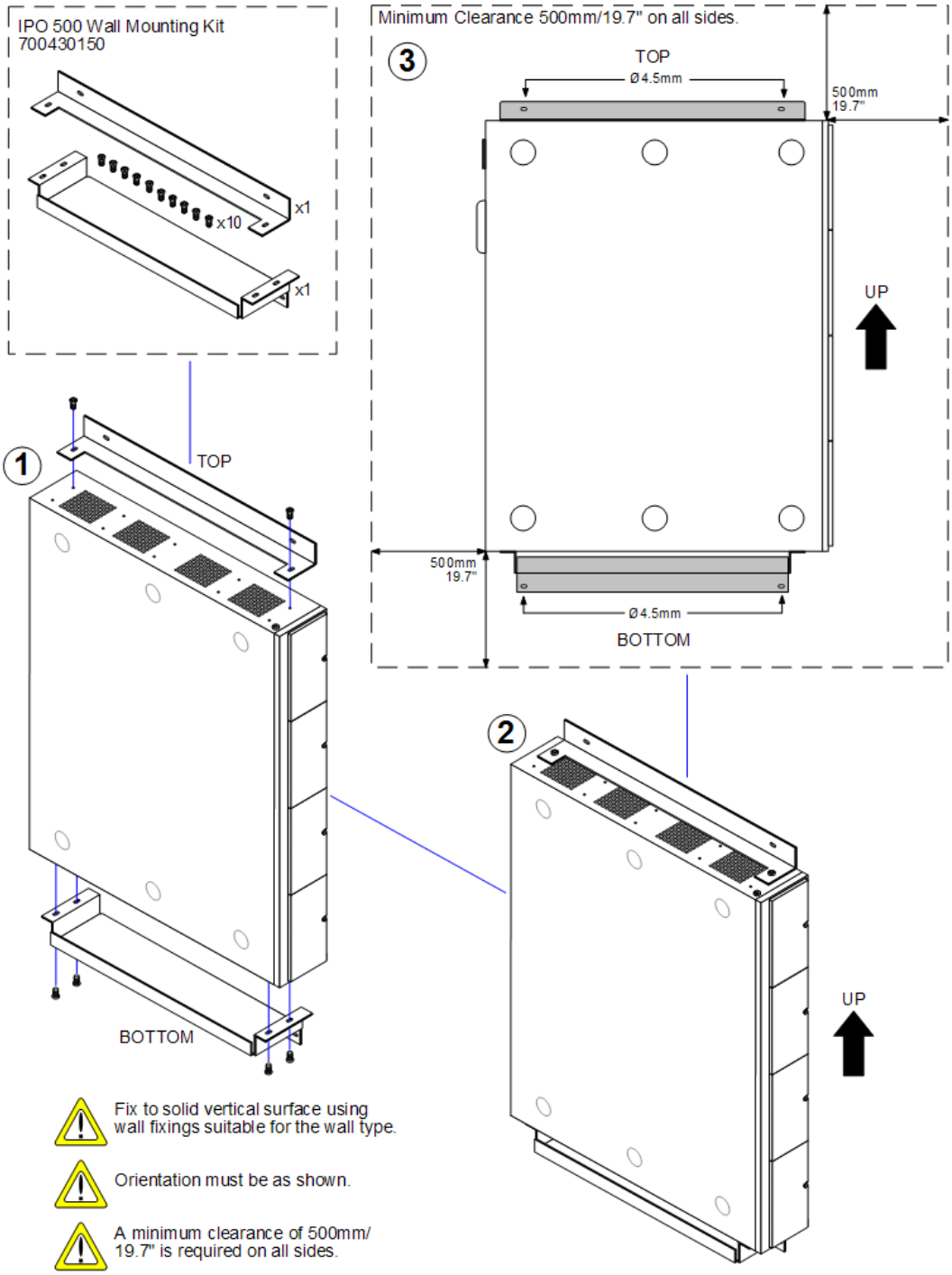

4.7 Rack Mounting

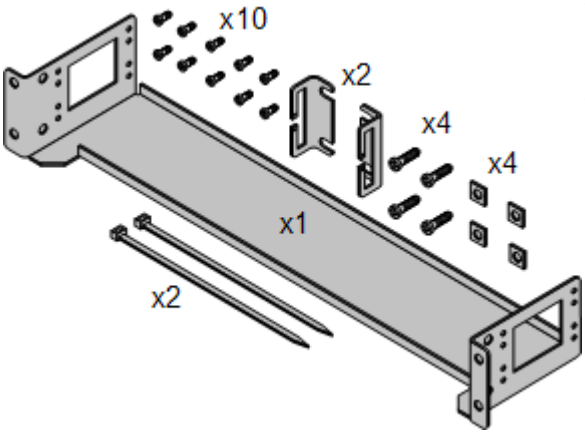

The IP500 control unit and IP500 external expansion units can be rack mounted if required into 19-inch rack systems. This requires an IPO IP500 RACK MNTG KIT (SAP 700429202) for each unit.

The kit includes:

- A rack mounting bracket and screws for attachment of the bracket to the unit
- Nuts and bolts for rack attachment.
- Brackets and cable ties for cable tidying.

As indicated in the diagram following, the rack mounting bracket can be used in several positions on the unit. IP400 external expansion units used in an IP500 system can also be rack mounted but use a separate IP400 Rack Mounting Kit.

Environmental Requirements

In addition to the existing environmental requirements 60 for an IP Office system, the following additional factors must be considered when rack mounting a unit:

1. Rack Positioning - Ensure compliance with the rack manufacturers safety instructions. For example check that the rack legs have been lowered and fixing brackets have been used to stop toppling.
2. Elevated Operating Ambient - If installed in a closed or multi-unit rack assembly, the operating ambient temperature of the rack environment may be greater than room ambient. Therefore, consideration should be given to installing the equipment in an environment compatible with the maximum ambient temperature (Tma) specified by the manufacturer.
   - ☐ Operating Temperature: 5°C (40°F) to 40°C (104°F).
   - ☐ Operating Humidity: 10% to 95% non-condensing.
3. Reduced Air Flow - Installation of the equipment in a rack should be such that the amount of air flow required for safe operation of the equipment is not compromised. Proper ventilation must be maintained. The side ventilation slots on the IP500 control unit should not be covered or blocked.
4. Mechanical Loading - Mounting of the equipment in the rack should be such that a hazardous condition is not achieved due to uneven mechanical loading.
5. Circuit Overloading - Consideration should be given to the connection of the equipment to the supply circuit and the effect that overloading of the circuits might have on overcurrent protection and supply wiring. Appropriate consideration of equipment nameplate ratings should be used when addressing this concern.
6. Reliable Earthing - Reliable earthing of rack-mounted equipment should be maintained. Particular attention should be given to supply connections other than direct connections to the branch circuit (e.g. use of power strips).
7. ⚠ Only the screws provided with the mounting kit should used to attach the brackets to the control unit.

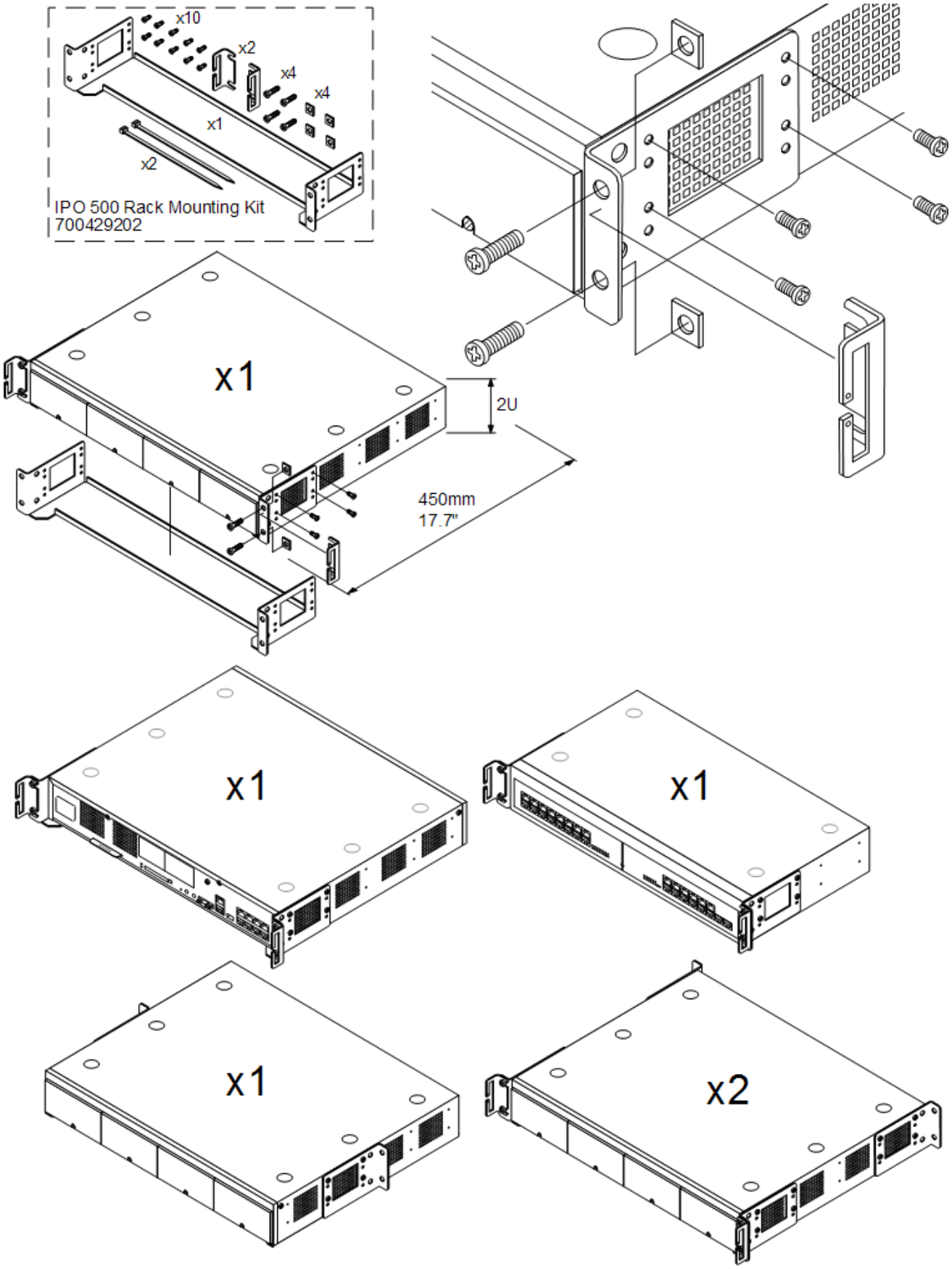

- ⚠ Only the screws provided with the mounting kit should used to attach the brackets to the control unit.

4.8 Connecting External Expansion Modules

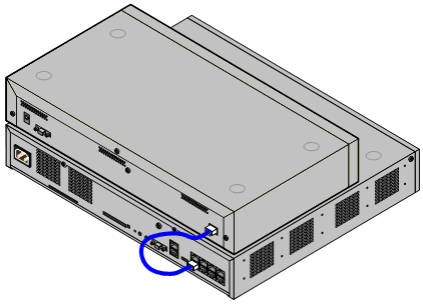

Any external expansion modules should be connected to the control unit before power is applied to the control unit. Ensure that modules are attached in the order that matches the planned or pre-built configuration.

External expansion modules connect to the IP Office control unit using an expansion interconnect cable. Each module is supplied with an expansion connect cable and a power supply unit 36. An appropriate locale specific power cord 37 for the power supply unit must be ordered separately.

- Each external expansion module is supplied with a blue 1 meter (3'3'') expansion interconnect cable. This cable must be used when connecting to expansion ports on the rear of a control unit.
- When connecting to expansion ports on an IP500 4-Port Expansion card, a yellow 2 meter (6'6") expansion interconnect cable can be used in place of the standard blue cable. 4 Yellow cables are supplied with the IP500 4-Port Expansion card.

Installation Requirements

- ☐ Installation space either on or under the existing IP Office control unit.
- ☐ Switched power outlet socket.
- ☐ Available EXPANSION port on the control unit.
- ☐ Grounding Requirements
  - ☐ **Functional Grounding**
    Connection of a functional earth 41 is:
    - ☐ Recommend for all modules.
    - ☐ Connection of a functional ground is mandatory for Analog Trunk modules.
  - ☐ **Protective Grounding**
    Connections of a protective ground via surge protection equipment 42 is:
    - ☐ Mandatory for Analog trunk modules in the Republic of South Africa.
    - ☐ Mandatory for Digital Station and Phone modules connected to out of building extensions.
    - ☐ Mandatory for Digital Station V2 and Phone V2 modules.

Tools Required

- ☐ Manager PC.
- ☐ Tools for rack mounting 92 (optional).

Parts and Equipment Required

- ☐ **External Expansion Module**.
  Each module is supplied with a suitable external power supply unit and a 1m blue interconnect cable. 2m Yellow interconnect cables are supplied with the IP500 4-Port Expansion card and should only be used with that card.
- ☐ Power cord for the power supply unit 37.
- ☐ Rack mounting kit 43 (optional).
- ☐ Wall mounting kit - IP500 external expansion modules only (optional).
- ☐ Cable labeling tags.

Procedure

1. External expansion modules should not be attached to a control unit that has power.
2. If the IP Office system is being installed in a rack, attach the rack mounting kit 92 to the expansion module.
3. Attach the external expansion module's power supply but do not switch power on.
4. Connect the expansion interconnect cable from the module's EXPANSION port to the EXPANSION port on the control unit. Make careful note of the port used and include this detail on the cable label and any other system records.

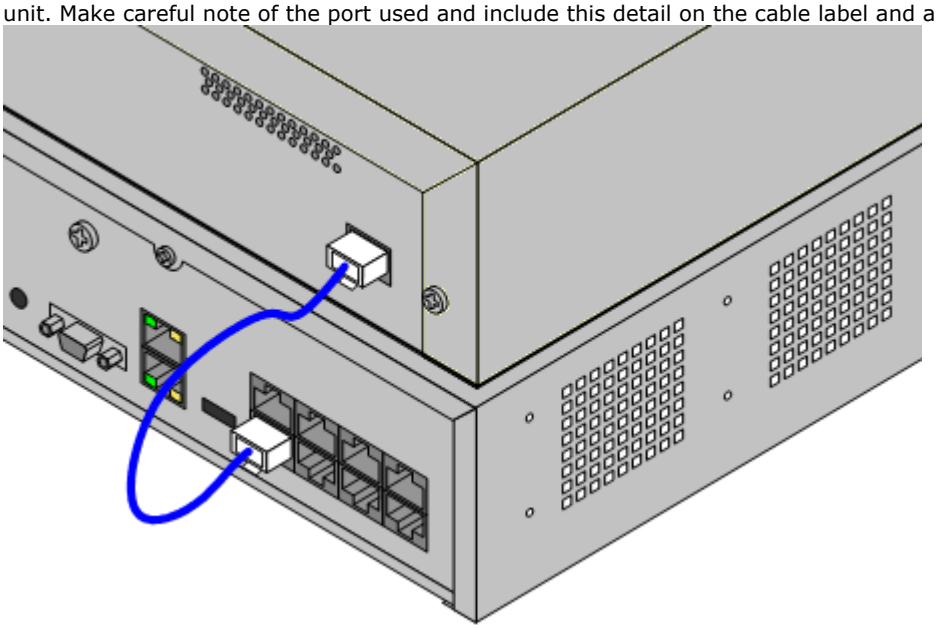

4.9 Grounding

Use of ground connections reduces the likelihood of problems in most telephony and data systems. This is especially important in buildings where multiple items of equipment are interconnected using long cable runs, for example phone and data networks.

All IP Office control units and external expansion modules must be connected to a functional ground. Where the unit is connected to a power outlet using a power cord with an earth lead, the power outlet must be connected to a protective earth.

In some cases, such as ground start trunks, in addition to being a protective measure this is a functional requirement for the equipment to operate. In other cases it may be a locale regulatory requirement and or a necessary protective step, for example areas of high lightning risk.

- ⚠ **WARNING**
  During installation do not assume that ground points are correctly connected to ground. Test ground points before relying on them to ground connected equipment.
- **Additional protective equipment**
  In addition to grounding, additional protective equipment will be required in the following situations.
  - On any Digital Station or Phones external expansion module connected to an extension located in another building. Refer to "Out of Building Telephone Installations 42".
  - In the Republic of South Africa, on all Analog Trunk external expansion modules (ATM16) and on any control units containing an analog trunk cards (ATM4/ATM4U).

Tools Required

- ☐ M4 Cross-Head Screwdriver.
- ☐ Tools suitable for crimping a cable spade.

Parts and Equipment Required

- ☐ 14AWG Solid copper wire for ground connection.
- ☐ Cable sleeve matching local regulator requirements. Typically green for a functional ground and green/yellow for a protective ground.

The ground point on IP Office control units and expansion modules are marked with a ⏚ or ⏚ symbol. Ground connections to these points should use a 14 AWG solid wire with either a green sleeve for a functional ground or green and yellow sleeve for a protective ground.

IP500/IP500 V2 Control Unit

On IP500 and IP500 V2 control units the ground point is located above the RS232 DTE port.

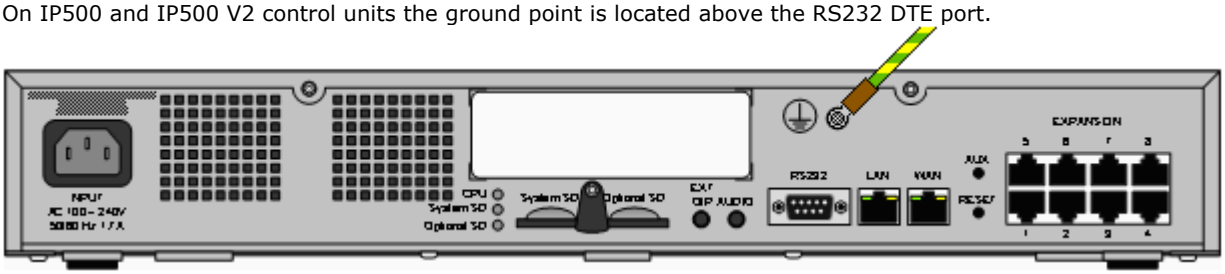

External Expansion Modules

On expansion modules, the ground point is a 4mm screw located towards the right on the rear of the module.

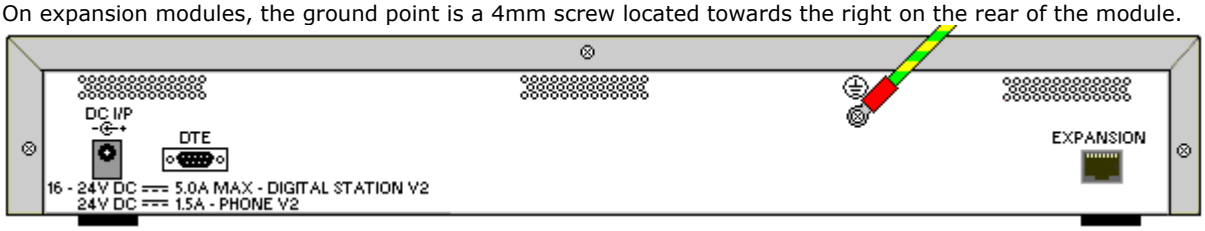

- On some older modules, the dedicated ground point screw is not present. In those cases, the top-center cover fixing screw (3mm) can be used as an alternative ground connection point. A toothed washer should be added to ensure good contact.

4.10 Network Connection

The section below details how a new IP Office system determines what IP address it should use. Note that this only applies for a new system loading IP Office Release 7.0 or higher.

IP Address and DHCP Mode Resolution

When a defaulted or new IP Office control unit is switched on, it requests IP address information from a DHCP Server on the network. This operation will occur whether a LAN cable is connected or not. The process below is done separately for both the LAN port (LAN1 in the configuration) and the WAN port (LAN2 in the configuration) on the back of the IP Office control unit.

- The syste, makes a DHCP request for what IP address information it should use.
- If a DHCP server responds within approximately 10 seconds, the control unit defaults to being a DHCP client and uses the IP address information supplied by the DHCP server.
- If no DHCP Server responds, the control unit still defaults to being the DHCP client but assumes the following default addresses:
  - LAN Port (LAN1): 192.168.42.1/255.255.255.0.
  - WAN Port (LAN2): 192.168.43.1/255.255.255.0.
  - Note that the IP Office does not check that these addresses are valid and or available on the network.
- Systems running in IP Office Essential Edition can also be configured as a DHCP server. They can also be configured to only provide DHCP for Avaya IP phones and or for remote access dial-in connections. DHCP Server options are not supported for systems running in IP Office Basic Edition - PARTNER® Mode, IP Office Basic Edition - Norstar Mode and IP Office Basic Edition - Quick Modes.

- **!** Once an IP500 V2 control unit has obtained IP address and DHCP mode settings, it will retain those settings even if rebooted without a configuration file present on the System SD card. To fully remove the existing IP address and DHCP mode setting the IP Office must be defaulted using IP Office Manager.

PC Connection

Depending on the conditions that applied when the IP Office control unit was first started, a PC can be connected as follows:

- **If the IP Office is not connected to a network:**
  Connect the PC directly to the IP Office. It must be set to an address valid on the same network as the IP Office defaults above.
- **If the IP Office is connected to a network with no DHCP server:**
  Connect the PC directly to the IP Office. It must be set to an address valid on the same network as the IP Office defaults above.
- **If the IP Office is connected to a network with a DHCP server:**
  Connect the PC to the network. It must be set to be a DHCP client or to an address that is valid for the network.

4.11 Starting the System

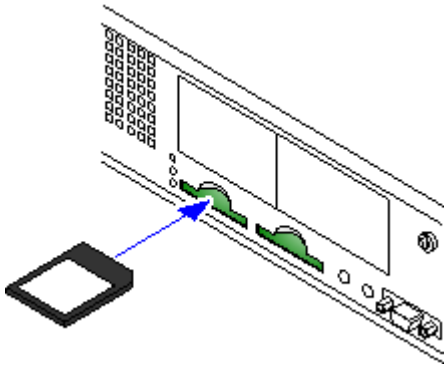

1. With the IP500 V2 control unit shut down or unpowered, insert the Avaya System SD card into the **System SD** slot on the rear of the control unit.
   - On newer controls units, the SD card slots are partially covered by a plastic tab. Partial release the screw holding the tab so that it can be moved clear of the required card slot.
   - Ensure that you have the correct card.
   - Ensure that the card has the level of software required. If necessary the card can be upgraded to match the version of IP Office Manager 81.
2. Apply power to the external expansion modules if any. The power outlet used must include a switch and in cases where the power cord includes an earth lead, that outlet must have a protective earth connection.
3. Apply power to the IP500 V2 control unit. The power outlet used must include a switch and the power outlet must have a protective earth connection.
4. The control unit will begin loading firmware from the System SD card with which it will upgrade itself and the components installed in the control unit.
5. This process takes approximately a minute. The end of this process will be indicated by LED1 on each base card flashing every 5 seconds. LED9 on each base card fitted with a trunk daughter card will also flash every 5 seconds.
6. The control unit will then begin upgrading the external expansion modules. This will be indicated by the red center LED on each module flashing red. The process is completed when the LED changes to steady green.
7. If a configuration file is already present on the System SD 83 card it is loaded by the IP Office. If not, the IP Office creates a default configuration based on the components of the system and copies that configuration onto the System SD card.
8. It should be possible now to use IP Office Manager to access the configuration of the IP Office.

The LEDs on the rear of the control unit go through the following sequence during a normal start up. Note that the times are approximately only:

LED	4s	4s	12s	5s	2s	5s	5s	10s	10s	Finished
CPU	Orange	Green	Green	Green Red	Green	Green	Green	Green	Green	Green
System SD	Orange	Off	Green	Green	Green	Off	Green	Green	Green Flash	Green
Optional SD If present.	Orange	Off	Green	Green	Green	Off	Off	Green	Green	Green

On the front of the control unit, LED1 on any IP500 base cards fitted is used as follows. LED9 is also used for any trunk daughter cards fitted.

LED	30s	30s	Finished
LED1/LED9	Red	Red Fast Flash	Red Flash every 5 seconds

4.11.1 Checking the LEDs

Control Unit LEDs

LED	Description
Optional SD **System SD**	• **Off** = Card shutdown 178. • **Green on** = Card present. • **Green flashing** = Card in use. • **Orange steady** = Reset imminent. • **Red flashing** = Card initializing or shutting down. • **Red fast flashing** = card full • **Red steady** = Card failure/wrong type.
CPU	• **Alternate red/green** = Starting up. • **Green on** = Okay. • **Red on** = No software. • **Flashing Red** = Error/Shutdown.

Base Card LEDs

Base Card	LEDs 1 to 8 Usage

All Cards	• LED1 is also used for base card status:
	  • **Red On** = Error
	  • **Red Slow Flash** = Initializing.
	  • **Red Flash every 5 seconds** = Card okay.
	  • **Red Fast Flash** = System shutdown.

IP500 Analog Phone	• No status LEDs are used for analog phone extensions.
IP500 Digital Station	• **Green Flashing** = Phone detected. • **Green On** = Phone active.
IP500 TCM8	• **Green On** = Phone detected.

IP500 Combination	• LEDs 1 to 6
	  • **Green Flashing** = Phone detected.
	  • **Green On** = Phone active.

IP500 VCM	• LEDs 1 to 8 are unlabelled. They are used to indicate voice compression channel usage. Each LED lit represents 12.5% of the available voice compression channel capacity in use (total card capacity rather than licensed capacity).

IP500 4-Port Expansion	• LEDs 1 to 8 are used for the expansion ports on the rear of the control unit. LEDs 9 to 12 are used for the card's own expansion ports.
	  Green / **On** / Expansion module present.
	  Red / **Flashing** / Initializing.
	  Red / **On** / Error.
	  Orange / **Regular Flash** / Base card okay.

Trunk Daughter Card LEDs

Trunk Daughter Card	LEDs 9 to 12 Usage

All cards	• LED 9 is also used for daughter card status.
	  • **Red On** = Error
	  • **Red Slow Flash** = Initializing.
	  • **Red Flash every 5 seconds** = Card okay.
	  • **Red Fast Flash** = System shutdown.

Analog Trunk	• **Green on** = V1: Card installed. V2: Line connected to the port but idle. • **Green flashing** = Line in use.
PRI Trunk	• **Off** = No trunk present. • **Green on** = Trunk present. • **Green flashing** = Trunk in use. • **Red/Green Fast Flash** (port 9) or **Green Fast Flash** (port 10) = Alarm indication signal (AIS) from the trunk remote end. • **Red with Green Blink** (port 9) or **Green Blink** (port 10) = Port in loopback mode (set through IP Office System Monitor).
BRI Trunk	• **Off** = No trunk present. • **Green on** = Trunk present. • **Green flashing** = Trunk in use.

External Expansion Module LEDs

Module	LEDs
All	The center LED on all external expansion modules is used to indicate the overall state of the module as follows: • **Red flashing** = Module starting up/Loading firmware. • **Red on** = Error. • **Green on** = Module okay. • **Green flashing** = Module starting up/Loading firmware (IP500 DS16A/30A module only).
Analog Trunk 16	• None.
BRI So8	• **Green On** = Connected. • **Green Flashing** = Activity.
Digital Station 16/30	• **Green Flashing** = Phone detected. • **Green On** = Phone active.
Digital Station 16A/30A	• **Green On** = Phone detected.
Phone	• None.

4.12 Changing the System to Standard Mode

However, if using IP Office Manager for system configuration, when IP Office Manager is first connected to the new or defaulted system, it will display an **Initial Configuration** menu prompting you to confirm the mode.

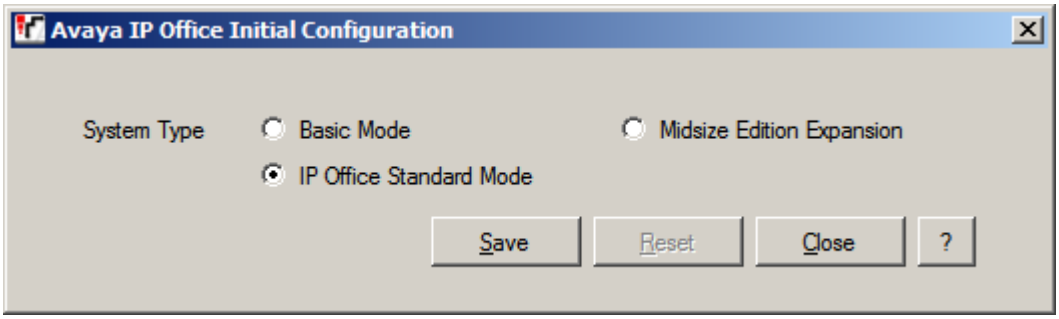

- For IP Office Basic Edition - Quick Mode, IP Office Basic Edition - PARTNER® Mode and IP Office Basic Edition - Norstar Mode systems, leave the selection set to **Basic Mode**.
- For a system that you want to run in IP Office Essential Edition, IP Office Preferred Edition or IP Office Advanced Edition modes, select **IP Office Standard Mode**.
  - For IP Office Release 8.0 and higher, for an IP500 V2 system to run in IP Office Essential Edition, IP Office Preferred Edition or IP Office Advanced Edition mode, its configuration must include an **Essential Edition** license. A IP Office Essential Edition, IP Office Preferred Edition or IP Office Advanced Edition system without this license will not allow any telephony functions until the license is added..
- For a system that is being installed as an expansion server for a Server Edition network, select **Midsize Expansion** . Installation for a Server Edition network is not covered by this manual.

4.12.1 Manually Changing the System to Standard Mode

The process below will change the mode of the system and default its configuration.

- **! WARNING**
  This process will require the IP Office system to reboot in order to complete the process. Any current calls and services will be ended by the reboot.

1. Using IP Office Manager, receive the configuration from the system.
2. When requested, enter the service user name and password. The defaults are **Administrator** and **Administrator**.
3. The IP Office Manager application will automatically switch to its simplified view as the configuration from a system running in IP Office Basic Edition - Quick Mode.
4. Select **File | Advanced | Switch to Standard Mode (Default)**.
5. The configuration will be changed to a default one for a IP Office Essential Edition system and IP Office Manager will switch to its advanced view mode.
6. This is a suitable time to begin initial configuration 106 before sending the configuration back to the IP Office system to restart in IP Office Essential Edition.
   - For IP Office Release 8.0 and higher, for an IP500 V2 system to run in IP Office Essential Edition, IP Office Preferred Edition or IP Office Advanced Edition mode, its configuration must include an **Essential Edition** license. A IP Office Essential Edition, IP Office Preferred Edition or IP Office Advanced Edition system without this license will not allow any telephony functions until the license is added..
7. Once the system has rebooted, use IP Office Manager to again receive the configuration from the system. The user name and password for configuration should be the IP Office Standard Version mode defaults **Administrator** and **Administrator**.

4.12.2 Automating the Change to Standard Mode

If the only systems that you install are IP Office Essential Edition, the Manager application can be used to automate part of the process above.

- **! WARNING**
  This process will require the IP Office system to reboot in order to complete the process. Any current calls and services will be ended by the reboot.

1. In IP Office Manager, select **File | Preferences**.
2. On the **Preferences** sub-tab, enable **Default to Standard Mode**.

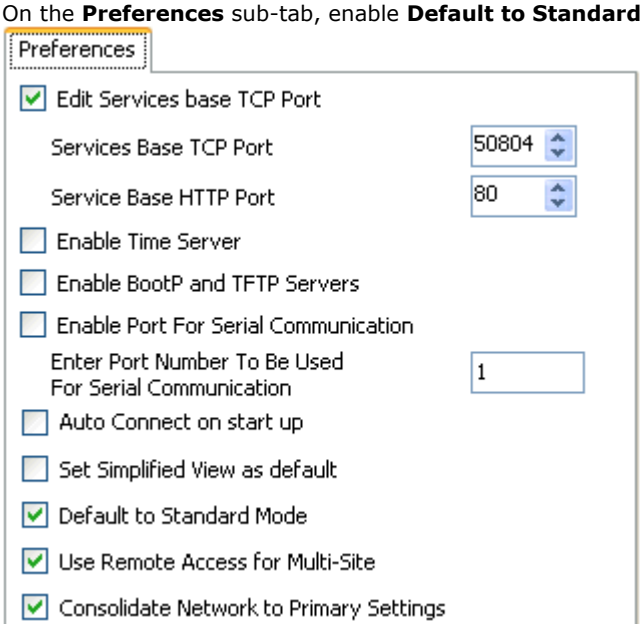

3. With this option enabled, when a configuration for a new or defaulted system running in IP Office Basic Edition - Quick Mode is received by Manager, it will automatically be converted to a IP Office Essential Edition configuration. This setting does not affect existing systems with non-default configurations.
4. **! Important: IP Address Settings Default to Server**
   The conversion will set the DHCP mode to ***Server*** and the LAN addresses to their defaults of 192.168.42.1 and 192.168.43.1. Using Manager to change these settings to the required values.
5. This is a suitable time to begin initial configuration 106 before sending the configuration back to the IP Office system to restart in IP Office Essential Edition.
   - For IP Office Release 8.0 and higher, for an IP500 V2 system to run in IP Office Essential Edition, IP Office Preferred Edition or IP Office Advanced Edition mode, its configuration must include an **Essential Edition** license. A IP Office Essential Edition, IP Office Preferred Edition or IP Office Advanced Edition system without this license will not allow any telephony functions until the license is added..
6. Sending the configuration back to the system will restart the system in IP Office Essential Edition.

4.13 Connecting Phones

During initial power up, the IP Office automatically creates extension and user entries for all analog and digital extension ports (DS and TCM) in the system. This allows those devices to be connected without any additional programming.

- **! Warning**
  If the system has been upgraded from a previous release of IP Office software, all phones will be restricted from making any calls until a system upgrade license 406 has been entered. The dialing restriction includes not being able to make emergency calls.
- This section does not cover the installation of DECT, H323 and SIP telephones. For installation of those devices refer to the appropriate supplementary installation manuals.

4.13.1 Analog Phones

Connect any analog phones to their appropriate Phone 401 ports. Ensure that those connected to power failure ports 57 are clearly labeled as such.

4.13.2 ETR Phones

Connect any ETR phones to their appropriate ETR 397 ports. These phones do not need to load additional firmware.

4.13.3 DS Phones

Connect any digital phones to their appropriate DS 395 ports. These phones may need to upgrade their firmware to match that supported by the IP Office core software. The appropriate firmware is supplied with the IP Office Manager software and copied onto the System SD card for IP500 V2 systems.

The phones will automatically load the firmware from the IP Office system if necessary.

- The upgrade process takes approximately 10 minutes during which time the phone will display a warning. The phone should not be disconnected during this process.
- Due to memory requirement, only 10 phones of the same type can be upgraded at a time. Starting from the first port needing to be upgraded, the IP Office will upgrade all connected phones of the same type needing upgrading in batches. It will then upgrade the next connected type of phones needing to be upgraded.
- Once the phone connected to a port has been upgraded, the IP Office will not check whether the phone on that port needs to be upgraded again except following a system reboot, i.e. multiple phones cannot be upgraded by swapping the connected phones on the same.
- Avaya 2400 Series and 5400 Series phones need to have upgrading turned on or off. Refer to Upgrading 2400/5400 Phones 146.

4.13.4 TCM Phones

Connect any TCM phones to their appropriate TCM ports. These phones do not need to load additional firmware.

Default Buttons

For system's with TCM phone ports, when a phone is first connected to the port, the button programming of the associated user is overwritten with the default button programming appropriate for the phone model.

If the new system is being installed with a pre-staged configuration that include user button programming, the automatic defaulting of buttons to match the phone type will overwrite the user button settings. This behavior can be prevented by adding the following short code to the user's setup in the pre-programmed configuration:

- **Code:** *DCP
- **Feature:** Dial
- **Telephone Number:** 84000004,1,1,0
  The 4000004 part of the string above can also be used to adjust the defaults for the following phone settings:
  - The first digit sets the phone contrast = 1 (low) to 9 (high).
  - The last digit sets the ringer volume = 0 (high) to 7 (low).

Note that subsequently removing this short code will cause the buttons to return to defaulting according to the phone type.

Phone Type Setting

For some phones, the phone can only report its general type to the system rather than its specific model. It is recommended that after connecting all the phones, the phone types should be correctly set in the IP Office configuration.

- **! Important**
  The default types cannot be changed after installation without defaulting the configuration. Therefore you must ensure that you connect the correct type of phone to each port. If you need to swap phones, uses the process for exchanging extension numbers 135 rather than swapping wiring.

1. Using IP Office Manager, receive the configuration from the system.
2. Select **Extension**.
3. Selecting each extension in turn, on the **Extn** tab, check that the **Device Type** field is set to the correct phone model.

Default Type	Possible Phone Models
T7100	T7100, MT7100, MT7100N, Audio Conferencing Unit.
T7208	T7208, MT7208, MT7208N.
M7310	T7406E, T7406, M7310, M7310N
M7310BLF	T7316, M7310BLF
M7324	M7324, M7324N

4. Save the configuration back to the IP Office system.

4.13.5 IP/SIP Phones

The installation and configuration of H323 and SIP IP telephones is not covered by this document. Refer to the appropriate IP Office installation manual for the type of phone being installed.

Chapter 5.

Initial Configuration Using IP Office Manager

5. Initial Configuration Using IP Office Manager

This section covers basic configuration changes required for IP Office systems if using the IP Office Manager application. This covers just the basic configuration, the full range of configuration possible through IP Office Manager is covered in the IP Office Manager manual.

- **Entering Licenses** 107
  Enter licenses for features that require them.
- **Setting the System Locale** 108
  Setting the correct system locale affects a wide range of settings including trunk settings. The correct locale must be set for a system to operate correctly.
- **Extension Numbering** 112
  Renumber the user extensions if required.
- **Change the Default Passwords** 110
  The default passwords used for configuration access to the IP Office system should be changed.
- **Change the IP Address/DHCP Settings** 109
  If necessary, the IP address and DHCP mode of the IP Office system can be changed.
- **Trunk Configuration**
  Some basic trunk configuration may be required.
  - **Remove Unused Trunks** 114
    Disabling the use of trunks and trunk channels that are not available.
  - **Select the Clock Source for Digital Lines** 116
    Altering which digital trunk is used to provide the IP Office with its clock signal for call synchronization.
  - **Enter Trunk Prefixes** 118
    On systems where a prefix is being used for external dialing, ensure that the same prefix is added to incoming numbers in order to allow return calls.

5.1 Entering Licenses

For IP500 V2 control units, license files can be pre-loaded 83 onto the System SD card. Those licenses 405 will then be merged with the configuration when the control unit is powered up. Otherwise for all control units, licenses are entered into the configuration using IP Office Manager. In addition to the methods below, license can also be added by placing the addition licenses as a text file on the System SD card 83.

You must ensure that the licenses being entered have been issue against the **FK** serial number of the System SD card fitted in the system. Each license is a unique 32-character string based on the feature being licensed and the serial number of the SD card plugged into the system control unit.

Entering licenses manually is liable to errors caused by miskeying the correct 32-character string.

Entering Licenses

1. Start IP Office Manager 72 and receive the configuration from the IP Office system.
2. Select **System**.
3. The field **Dongle Serial Number** shows the serial number of the Feature Key Dongle is already detected. Check that this number matches the one against which the licenses have been issued.
4. Click **OK**.
5. Select **License**.
6. To add a license, click and select **License**. Enter the new license and click **OK**. We recommend that add licenses by cut and pasting them from a supplied file listing each 32-character license keys. That avoids potential issues with mistyping.
7. The **Status** of the new license should show ***Unknown*** and name the license as expected. If the name is ***Invalid***, the most likely cause is incorrect entry of the license key characters.
8. Click on the save icon to send the configuration back to the IP Office.
9. Use Manager to receive the configuration again and check that the status of the license. It should now be ***Valid***.

5.2 Setting the System Locale

Setting the correct system locale 51 affects a wide range of settings including trunk settings. The correct locale must be set for a system to operate correctly. It will also set the default language used for phone displays and for voicemail prompts. However language settings can be changed separately from the system locale if different language operation is required.

- **! WARNING**
  This process will require the IP Office system to reboot in order to complete the process. Any current calls and services will be ended by the reboot.
- This process can be performed through phone based administration from either of the first two systems in the system. For details, refer to the Phone Based Administration manual.

Setting the System Locale

1. Start IP Office Manager 72 and receive the configuration from the IP Office system.
2. Click on **System**.
3. Click on the **System** tab.
4. Use the **Locale** drop down list to select the required locale. The default language for the locale is shown in brackets, for some locales there may be more than one entry with different default languages for each.

   - ***Argentina***
   - ***Australia***
   - ***Bahrain***
   - ***Belgium***
   - ***Brazil***
   - ***Canada***
   - ***Chile***
   - ***China***
   - ***Colombia***
   - ***Denmark***
   - ***Egypt***
   - ***Finland***
   - ***France***
   - ***Germany***
   - ***Greece***
   - ***Hong Kong***
   - ***Hungary***
   - ***Iceland***
   - ***Ireland***
   - ***India***
   - ***Italy***
   - ***Japan***
   - ***Korea***
   - ***Kuwait***
   - ***Malaysia***
   - ***Mexico***
   - ***Morocco***
   - ***Netherlands***
   - ***New Zealand***
   - ***Norway***
   - ***Oman***
   - ***Pakistan***
   - ***Peru***
   - ***Poland***
   - ***Portugal***
   - ***Qatar***
   - ***Russia***
   - ***Saudi Arabia***
   - ***Singapore***
   - ***South Africa***
   - ***Spain***
   - ***Sweden***
   - ***Switzerland***
   - ***Taiwan***
   - ***Turkey***
   - ***United Arab Emirates***
   - ***United Kingdom***
   - ***United States***
   - ***Venezuela***

   - IP500 V2 Systems: If the system is configured to use Embedded Voicemail (the default for a new system), and the correct set of language prompts to match the locale are not present on the System SD card, IP Office Manager will display an error. The **Add/Display VM locales** option (*File* | *Advanced* | *Add/Display VM locales*) can be used to upload the language prompts from IP Office Manager.
5. Click on the save icon and save the updated configuration back to the IP Office system.

5.3 Changing the IP Address Settings

When a new or defaulted IP Office is switched on, the control unit will make a DHCP requests for IP address settings on each of its LAN interfaces. That is on its LAN port (LAN1) and on its WAN port (LAN2).

- If the IP Office receives a response from a DHCP server, it will configure itself as a DHCP client using the address details provided by the DHCP server.
- If the IP Office does not receive a response from a DHCP server, it will still configure itself as a DHCP server but using the following default address details:

Network Settings	LAN Port (LAN1)	WAN Port (LAN2)
IP address	192.168.42.1.	192.168.43.1
IP Mask	255.255.255.0	255.255.255.0
DHCP Mode	Client	Client
No of DHCP IP Addresses	200.	200.

If the IP address and DHCP mode settings are not suitable for the customers network they should changed. Note that changing the IP Office's IP address settings requires it to restart.

- **! WARNING**
  This process will require the IP Office system to reboot in order to complete the process. Any current calls and services will be ended by the reboot.

Changing IP Address Settings

1. Start IP Office Manager 72 and receive the configuration from the IP Office system.
2. Click on **System**.
3. On the **System** tab, in the **Name** field enter a distinctive name for the IP Office system. Click **OK**.
4. Click on the **LAN1** tab.
5. On the LAN Settings sub-tab, change the IP Address, IP Mask and DHCP Mode settings to match the customer requirements. These settings are used for the **LAN** port on the back of the IP Office control unit. Click **OK**.
6. Repeat the process for the **LAN2** tab. Those settings are used for the **WAN** port on the back of the IP Office control unit.
7. Click on the save icon and save the updated configuration back to the IP Office system.

5.4 Changing the Default Passwords

You should change the default passwords used for configuration access to the IP Office system. Failure to do this leaves the system insecure to unauthorized configuration changes.

- This manual assumes that this is a new system being installed. If this process is used for an existing system that has already been in operation for a period, any applications that are also using the configuration access password for access to the system will need to be reconfigured to use the new password. Note however that it is recommended that separate configuration access accounts with separate passwords are created for any applications that require configuration access.

Changing the Security Settings

1. Start IP Office Manager 72 and receive the configuration from the IP Office system.
2. Select **File | Advanced | Security Settings**.
3. Enter a user name and password of an account that has security configuration access to the IP Office system. The defaults (which should be changed as part of this process) are ***security*** and ***securitypwd***.
4. Click on **System** and select the **Unsecured Interfaces** tab.

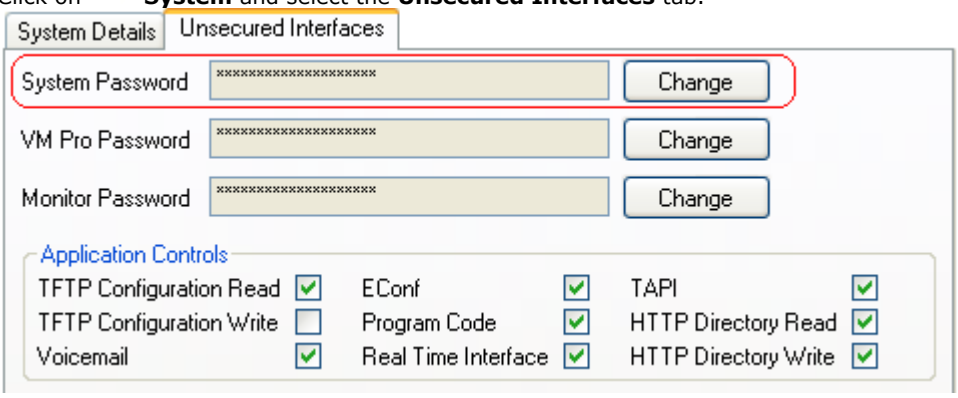

   - The **System Password** is used by Manager for remote software upgraded of the IP Office system. The default password is ***Administrator***. Click on the **Change** button and enter a new password. Click **OK**.
   - Click **OK**.
5. Click on **Service Users**. The list will show the service user accounts that exist to access the IP Office configuration.

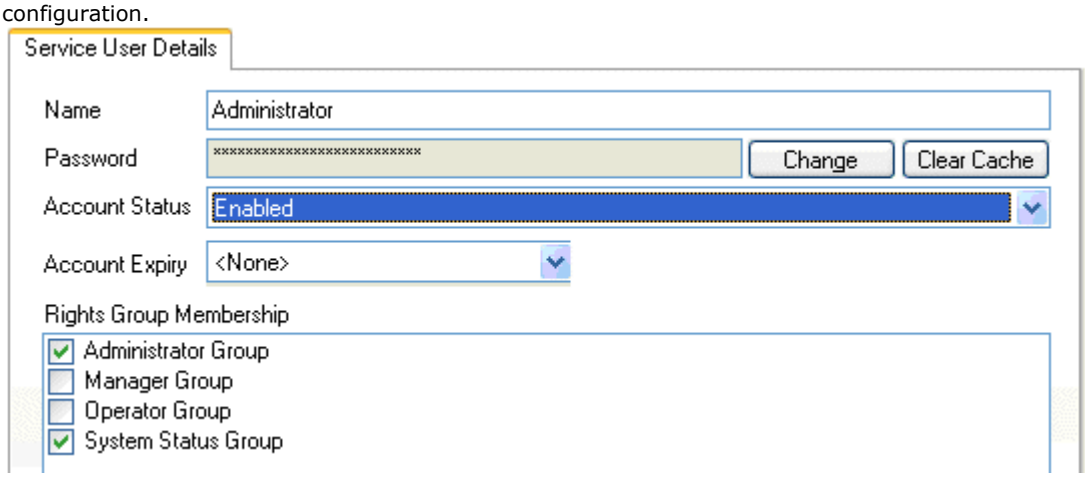

6. The default service users **Administrator**, **Manager** and **Operator** each use the same value (***Administrator***, ***Manager*** and ***Operator***) as their password. For each of these service users:
   - Click on the service user name. In the **Service User Details** tab, click on **Change** and enter a new password. Click **OK**.
   - Click **OK**.

7. Click on the **General** . The general security settings are displayed in the main display area.

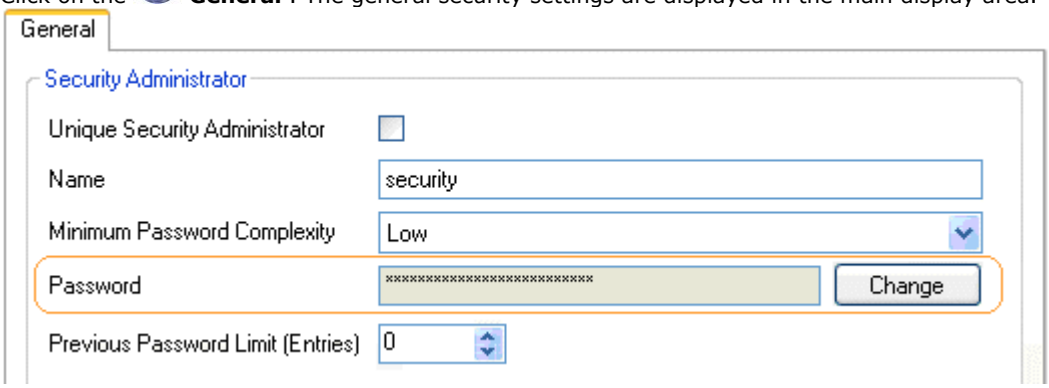

- Click on **Change** and enter a new password for the security administrator.

8. Click on **File | Configuration** to exit security configuration mode and return to the IP Office configuration.

Changing the Remote User Password

The IP Office configuration contains a user whose password is used as the default for remote dial in access to the IP Office network. The password of this user should be changed.

1. Start IP Office Manager 72 and connect to the IP Office system.
2. Click on **Users** and in the list of users click on **Remote Manager**.
3. On the **User** tab, enter a new password for the user and click **OK**.
4. Click on the icon and save the updated configuration back to the IP Office system.

5.5 Extension Numbering

Extension Numbering:

- IP Office Basic Edition - PARTNER® Mode, IP Office Basic Edition - Norstar Mode and IP Office Basic Edition - Quick Mode systems can use 2-digit or 3-digit numbering. In 2-digit systems, the user extensions are fixed as 10 to 57. In 3-digit systems the user extension are numbered 100 upwards by default but can be renumbered in the range 100 to 579.
- IP Office Essential Edition systems can use a mix of extension numbers up to 9 digits in length. By default extensions are given 3-digit extension numbers starting from 201 upwards.
- In IP Office Essential Edition, extension numbers are also used for hunt groups. In other modes, hunt groups have fixed numbers that cannot be used for extensions.

Number of Extensions:

- IP Office Basic Edition - PARTNER® Mode, IP Office Basic Edition - Norstar Mode and IP Office Basic Edition - Quick Modes supports 48 extensions in 2-digit numbering mode. 100 extensions are supported in 3-digit numbering mode.
- IP Office Essential Edition supports up to 384 extensions.

Changing Extension Numbers

IP Office Manager can be used to renumber all extensions on the system. This will also update any references to the extension number in other configuration fields.

1. Start IP Office Manager 72 and receive the configuration from the IP Office system.
2. Select **Tools | Extension Renumber**.

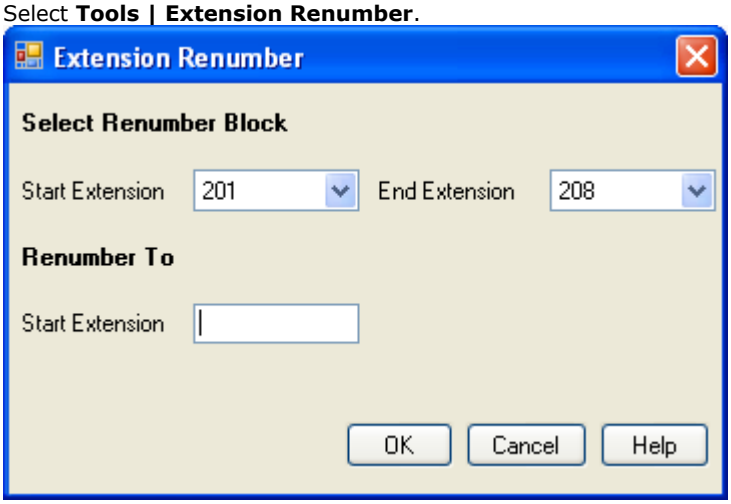

3. Click on the save icon and save the updated configuration back to the IP Office system.

Changing an Individual User's Extension Number

1. Select **User**. Locate and select the relevant user.

a. On the **User** tab, change the Extension number to the required new number.

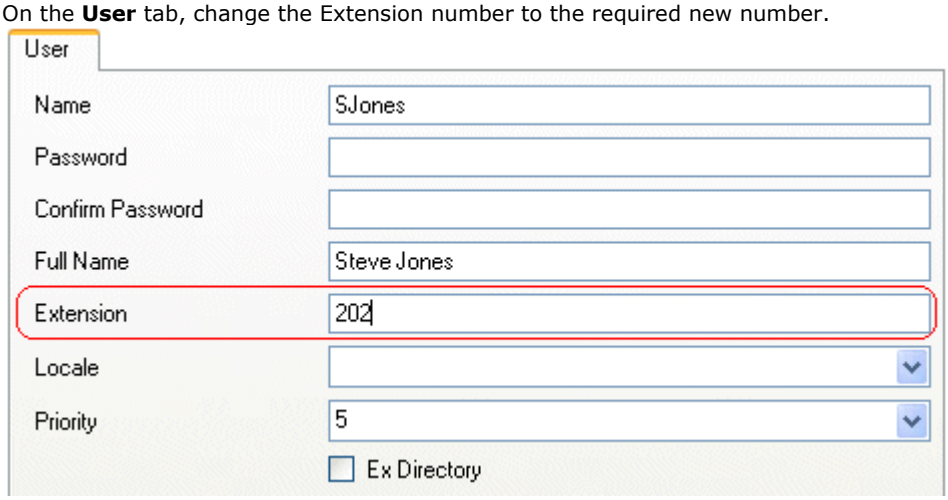

b. Click on another field. If an error warning appears it will most likely be due to a conflict with an existing use of that extension number.

- If this an error, click **Cancel** to return the user to their original extension number.
- If this is intended as the other entry will be corrected click **OK** and then edit the other entry.
- When **OK** is clicked, Manager will automatically propagate the number change to any hunt groups, incoming call routes, user buttons, bridged appearance buttons and call coverage appearance buttons associated with the user's original extension number.

2. If the user has an extension with which they are associated by being the extension's **Base Extension** setting, that setting is not automatically updated. If the user should still be associated with that extension by default, the extension must be updated manually to match the user's new extension number.

a. Select **Extension**.

b. Change the **Base Extension number** to match the user extension who should now be associated with that extension port by default.

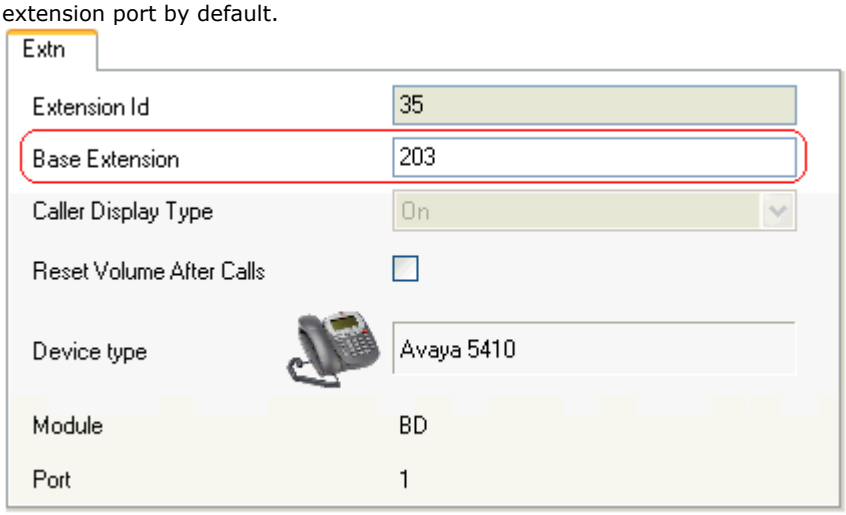

c. Click **OK**. Manager will probably give a validation error message due to a user being associated with two extensions. This can be ignored until all the user moves have been completed.

3. If changing several users repeat the processes as required.

4. Click ✔ to revalidate the configuration and check that no conflicts between users and associated extensions.

5. If the configuration changes are complete, send the configuration back to the IP Office and select appropriate settings for the reboot.

5.6 Disable Unused Trunks

Each IP Office trunk card provides a fixed number of trunk ports with digital trunk ports supporting a fixed number of digital channels. By default the IP Office configuration will have settings for all the possible trunks and channels.

In cases where the number of trunks or trunk channels in use or licensed is lower than the number supported by the trunk card, the unused trunks and channels must be disabled.

- ⚠ Failure to do this will cause problems with outgoing calls. For example, on a system with an ATM4 trunk card fitted but only two analog trunks actually connected, failure to disable the other two trunks within the IP Office configuration will cause 50% of outgoing call attempts to fail. This is because the system cannot automatically detect the service status of individual analog trunks.
  - For IP Office Release 8.1 Feature Pack 1 and higher with IP500 Analog Trunk 4 V2 cards and ATM4 Combination V2 cards, the system can detect with analog trunks are connected and so can automatically treat unconnected trunk ports as out of service.
- **! WARNING**
  This process will require the IP Office system to reboot in order to complete the process. Any current calls and services will be ended by the reboot.

Disabling Trunks

1. Start IP Office Manager 72 and receive the configuration from the IP Office system.
2. Within the IP Office configuration, select Line.
3. For each line, set those lines or channels that are not connected or being used as out of service. The location of the relevant setting varies for each trunk type.
   - **Analog Trunks**
     To disable the whole trunk, on the main form set the **Admin** option to ***Out of Service***.
   - **BRI, E1 PRI, S0 and QSIG Trunks**
     To disable the whole trunk, on the main form set the **Admin** option to ***Out of Service***. Otherwise set the number of channels to match the actual subscribed channels.

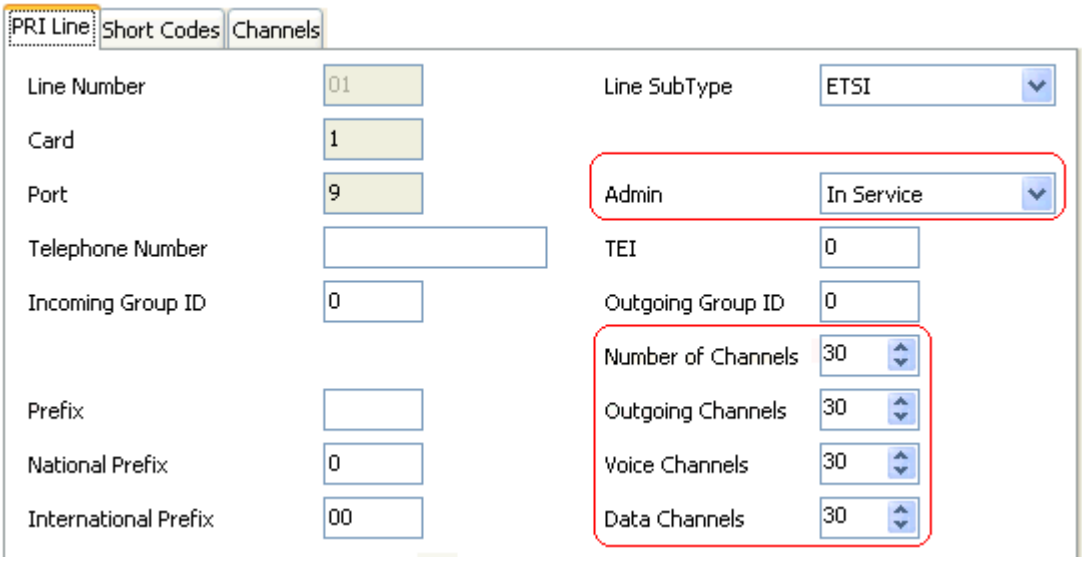

- **T1, T1 PRI and E1R2 Trunks**
  To disable the whole trunk, on the main form set the **Admin** option to ***Out of Service***. Otherwise select the Channels tab and set those channels that are not used to **Out of Service**.

PRI 24 Line | Channels

Channel	Groups	Line Appearance	Direction	Bearer	Type
1	0 0	705	Bothway	Any	Ground Start
2	0 0	706	Bothway	Any	Ground Start
3	0 0	707	Bothway	Any	Ground Start
4	0 0	708	Bothway	Any	Ground Start
5	0 0	709	Bothway	Any	Ground Start
6	0 0	710	Bothway	Any	Ground Start
7	0 0	711	Bothway	Any	Ground Start
8	0 0	712	Bothway	Any	Ground Start
9	0 0	713	Bothway	Any	Out Of Service
10	0 0	714	Bothway	Any	Out Of Service
11	0 0	715	Bothway	Any	Out Of Service
12	0 0	716	Bothway	Any	Out Of Service
13	0 0	717	Bothway	Any	Out Of Service
14	0 0	718	Bothway	Any	Out Of Service
15	0 0	719	Bothway	Any	Out Of Service
16	0 0	720	Bothway	Any	Out Of Service
17	0 0	721	Bothway	Any	Out Of Service
18	0 0	722	Bothway	Any	Out Of Service
19	0 0	723	Bothway	Any	Out Of Service
20	0 0	724	Bothway	Any	Out Of Service
21	0 0	725	Bothway	Any	Out Of Service
22	0 0	726	Bothway	Any	Out Of Service
23	0 0	727	Bothway	Any	Out Of Service
24	0 0	728	Bothway	Any	Out Of Service

Edit...

- For T1 set the **Type** to ***Out of Service***.
- For T1 PRI set the **Admin** field to ***Out of Service***.
- For E1R2 trunks set the **Line Signalling Type** to ***Out of Service***.

5.7 Setting the Digital Trunk Clock Source

Digital trunks require the telephone system at each end of the trunk to share a clock signal to ensure synchronization of call signalling. The IP Office can obtain and use the clock signal from any of its digital trunks. Typically the clock signal provided by a digital trunk from the central office exchange is used as this will be the most accurate and reliable clock source.

To do this, the **Clock Quality** setting on each line in the IP Office configuration is set to one of the following:

- ***Network***
  If available, the clock signal from this trunk should be used as the IP Office's clock source for call synchronization. If several trunk sources are set as Network, the IP Office will default to using one as detailed below.
- ***Fallback***
  If available, the clock signal from this trunk can be used as the clock source if none of the trunks set as ***Network*** are providing a clock source.
- ***Unsuitable***
  The clock source from this trunk will never be used as the IP Office's clock source.

If no clock source is available the IP Office can use its own internal clock if necessary.

In the example below the first IP Office is set to use the public network trunk as its clock source and ignoring the possible clock source from the QSIG trunk. The other IP Office system is using the clock signal received from the first IP Office on its QSIG trunk as its clock source. Thus both IP Offices are using the same clock source and that clock source is the public network exchange.

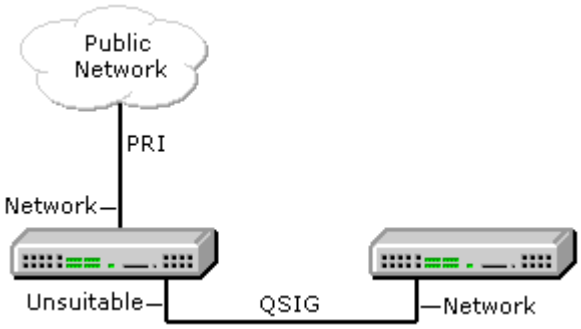

Multiple Source Priority

When multiple trunks with the same setting are providing clock signals, the trunk used is determined in the following order of priority.

- IP500 and IP500 V2 Control Units: Trunks are used in the order of slots 1 to 4 and then by port on each slot.
- IP421 and IP406 V2 Control Units: Trunks are used in the order Slot B ports 1 to 4, then Slot A ports 1 to 4.

Viewing the Current Clock Source

The current clock source being used by an IP Office system is shown on the Resources page within the IP Office System Status Application.

Setting a Trunk Clock Quality Setting

1. Within the IP Office configuration, select Line.
2. For each digital line, select the line and on the Line tab select whether that trunk should provide the clock source for the network or whether the trunk is unsuitable. For E1R2 trunks the **Clock Quality** setting is on the **Advanced** tab.

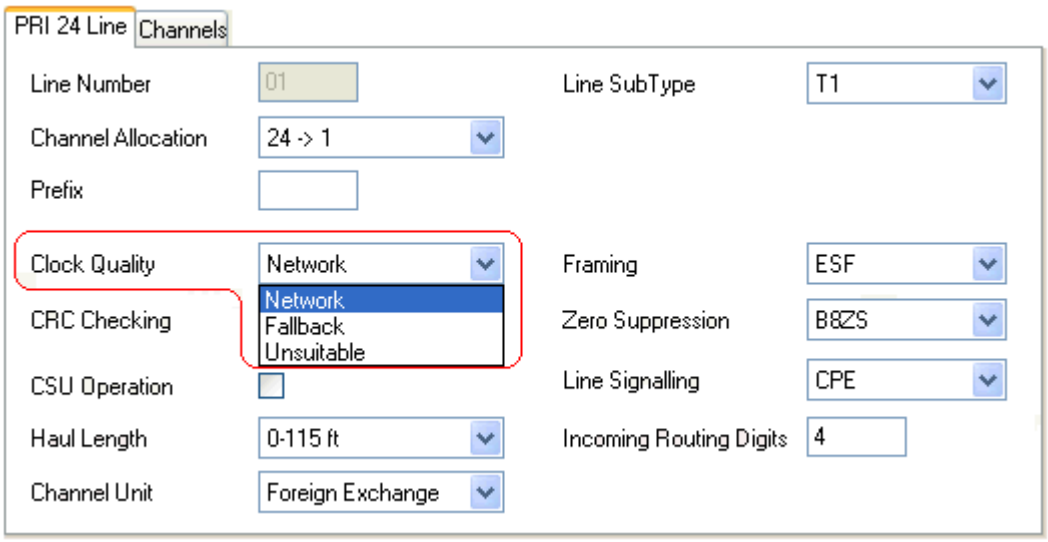

3. Ensure that only one trunk is set to ***Network***. This should preferably be a direct digital trunk to the central office exchange.
4. One other trunk can be set a ***Fallback*** should the selected Network trunk connection be lost. If possible this should be a trunk from a different provider since that reduces the chances of both sources failing at the same time.
5. Ensure that all other digital trunks are set as ***Unsuitable***.

5.8 Setting the Trunk Prefixes

Where a prefix has been implemented for outgoing calls, that same prefix needs to be added to trunk settings. The prefix is then used as follows:

- On incoming calls the prefix is added to any incoming ICLID received with the call. That allows the ICLID to be used by IP Office phones and applications to make return calls.
- On outgoing calls, the short codes used to route the call to a trunk must remove the dialing prefix.

1. Within the IP Office configuration, select **Line**.
2. For each line enter the prefix. The location of the relevant setting varies for each trunk type.
   - **Analog Trunks**

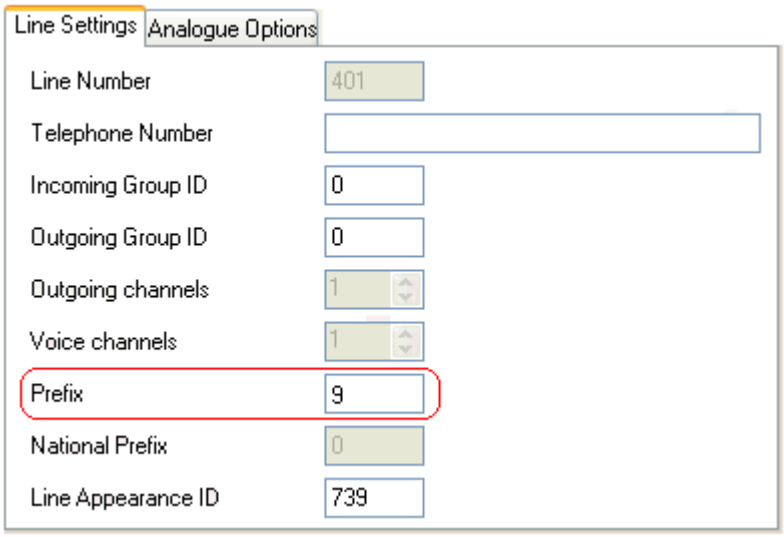

   - **T1 and T1 PRI Trunks**

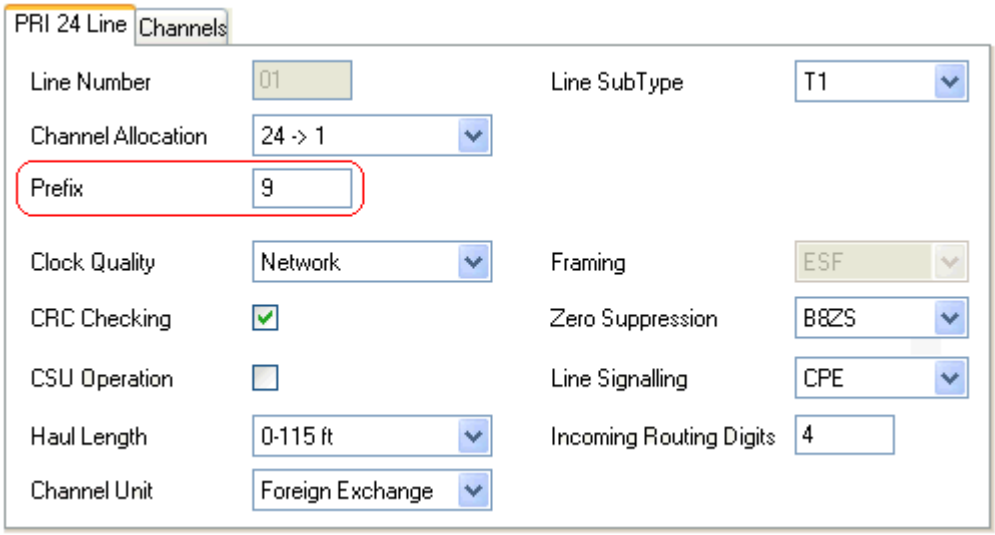

- **BRI, E1 PRI, S0 and QSIG Trunks**

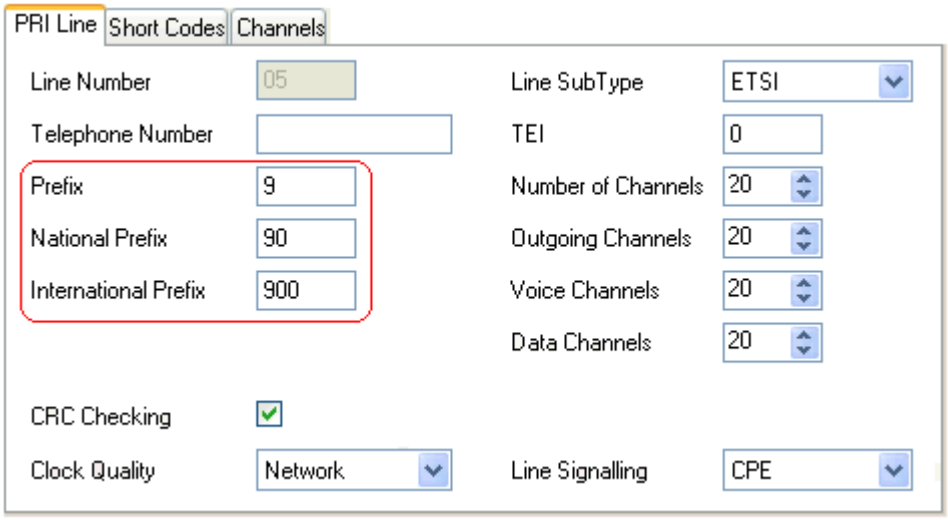

SIP Trunk Prefixes

For IP Office Release 6.0, the prefix fields **Prefix**, **National Prefix**, **Country Code** and **International Prefix** are available with the SIP Line settings. These fields are used in the following order:

1. If an incoming number (called or calling) starts with the + symbol, the + is replaced with the **International Prefix** .
2. If the **Country Code** has been set and an incoming number begins with that **Country Code** or with the **International Prefix** and **Country Code**, they are replace with the **National Prefix**.
3. If the **Country Code** has been set and the incoming number does not start with the **National Prefix** or **International Prefix**, the **International Prefix** is added.
4. If the incoming number does not begin with either the **National Prefix** or **International Prefix**, then the **Prefix** is added.

For example, if the SIP Line is configured with prefixes as follows:

- **Line Prefix:** 9
- **National Prefix:** 90
- **International Prefix:** 900
- **Country Code:** 44

Number Received	Processing	Resulting Number
+441707362200	Following rule 1 above, the + is replace with the **International Prefix** (900), resulting in 900441707362200. The number now matches the **International Prefix** (900) and **Country Code** (44).Following rule 2 above they are replace with the **National Prefix** (90).	**901707362200**
00441707362200	Following rule 2 above the **International Prefix** (900) and the **Country Code** (44) are replaced with the **National Prefix** (90).	**90107362200**
441707362200	Following rule 2 above, the **Country Code** (44) is replace with the **National Prefix** (90).	**901707362200**
6494770557	Following rule 3 above the the **International Prefix** (900) is added.	**9006494770557**

Chapter 6.
On-Boarding

6. On-Boarding

On-boarding is a process through which you can register an IP500 V2 system for remote support and maintenance from Avaya. The process of on-boarding is done using the IP Office Web Manager interface.

This section is a short summary of on-boarding. For full details on configure and administer SSL VPN services, see the Avaya IP Office SSL VPN Solutions Guide. You can download the guide from http://support.avaya.com.

Summary Steps

1. Login to IP Office Web Manager
2. **On-Board the System**
   This process has 3 main steps:
   a. **Obtain an Inventory File**
      From the system export a file that contains an inventory of the equipment within the system. This file is required in order to register the system for support.
   b. **Register the System**
      Register the system on the Avaya Global Registration Tool website and upload the system's inventory file. Once the system is registered, an on-boarding file is provided for the system. This file contains configuration settings for the SSL VPN service link.
   c. **Upload an On-Boarding File**
      Upload the on-boarding file to the system. The information within the file is used to update the system's configuration.

Configuration Changes Caused by On-Boarding

When an on-boarding file is uploaded to the IP500/IP500 V2 system, it can make a number of changes to the system configuration. It is important to be aware of these potential changes and to ensure that they are not subsequently overwritten or removed.

The changes are as follows. Those marked * are optional and depend on the settings included in the on-boarding file by the service provider.

- **SSL VPN Service**
  A new SSL VPN service is added to the Services section of the configuration.
- **SNMP Alarms***
  SNMP can be configured and two SNMP alarm traps added to the configuration. Note that this will overwrite any existing SNMP settings if SNMP has already been configured.
- **Short Codes***
  Short codes can be added using the Set Hunt Group Night Service and Clear Hunt Group Night Service actions. These can be used to enable and disable the SSL VPN service.
- **IP Route***
  A static IP route to the SSL VPN service can be added to the IP routes in the configuration.
- **Security Certificate**
  A security certificate for the SSL VPN service is added to the system's security settings.

6.1 Logging In to Web Manager

In order to login you need to know the IP address of the system and to connect your PC to it or the network which it is already on.

Logging on to IP Office Web Manager

1. In a web browser, enter the IP address of the system in the format *http://<IP Address>*, for example ***http://192.168.42.1***.
2. The web page shown displays a number of links, select the ***IP Office Web Management*** link.
   - As an alternative you can enter the full address for web management directly. Enter the following address into the browser's address bar, replacing *<IP Address>* with the system's IP address. Note that the address is case sensitive: *https://<IP Address>:8443/webmanagement/WebManagement.html*
3. If the browser responds with a security warning, follow the menu settings displayed for continuing with the connection.
4. When the login menu is displayed, enter the user name and password for system administration. The defaults are ***Administrator*** and ***Administrator***.

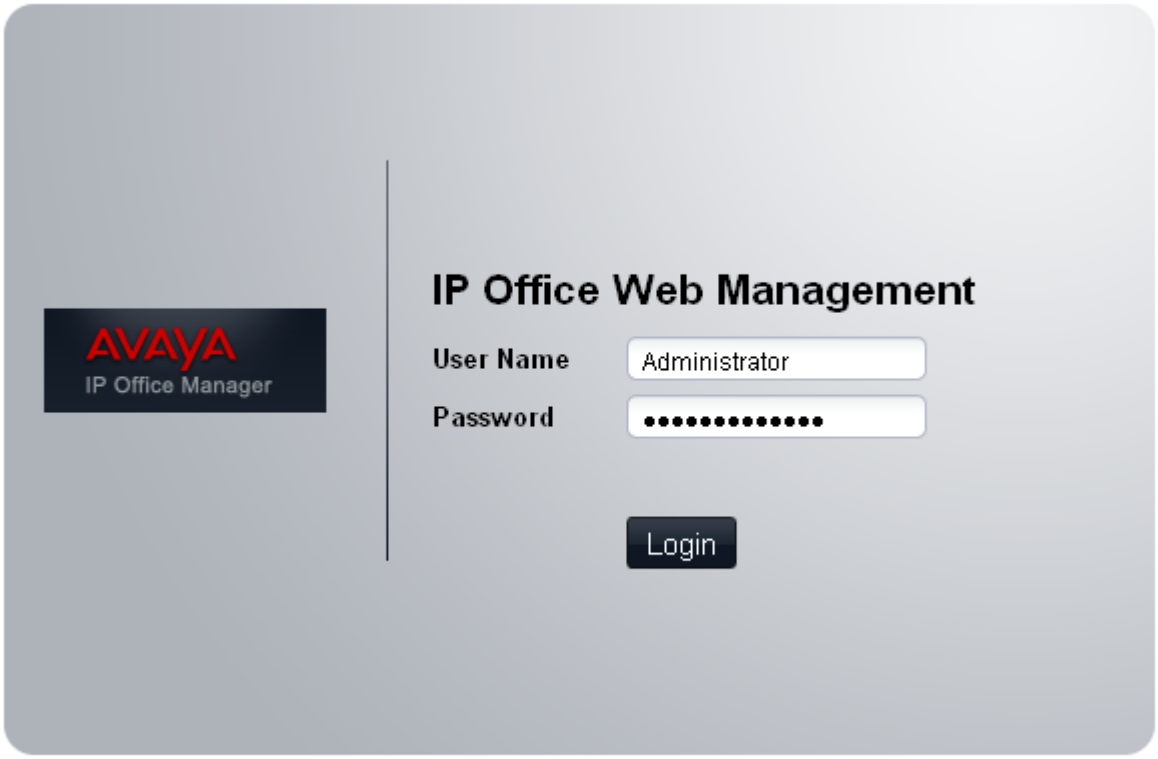

5. Click on **Login**.
6. The home page for the system web management is displayed.
   - Do not use the browsers forward, back and other history functions while in web management. Doing so will require you to log in again.
   - Pages in web management cannot be bookmarked.
   - You must remember to log out when you have finished editing the configuration. The browser is not automatically logged out after any duration.

6.2 On-Boarding

1. Login to IP Office Web Manager.
2. Select **Tool | On-boarding**. The On-boarding menu is displayed.

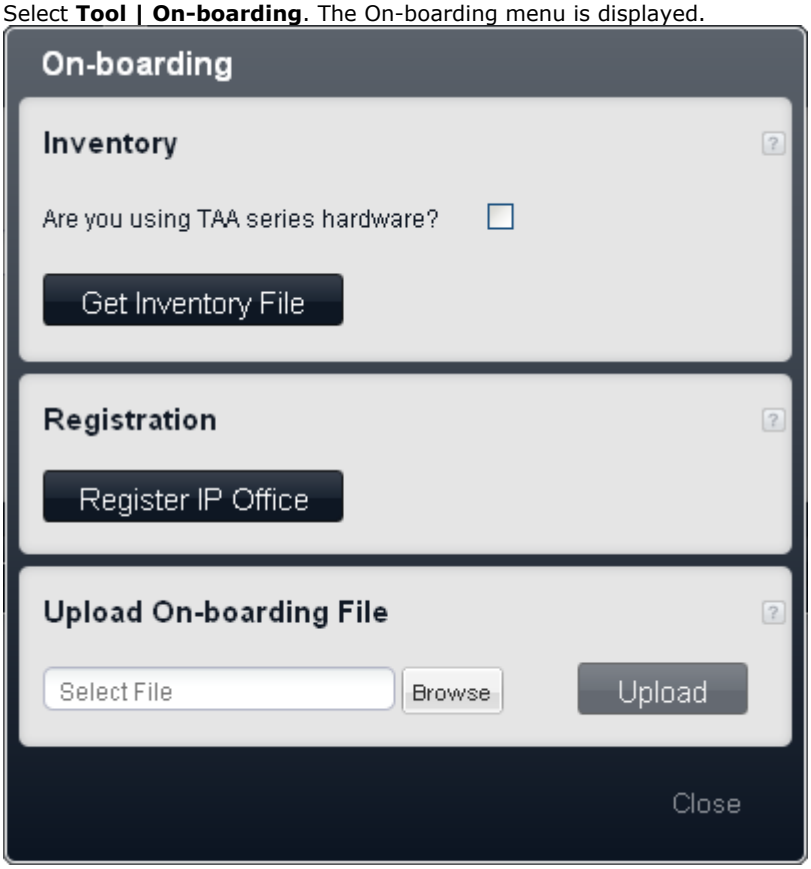

3. Click **Get Inventory File** to to download an inventory.xml file for the system. When you register the IP Office system for remote support, the inventory file is required as part of the registration and is uploaded to the Avaya Global Registration Tool (GRT) where the inventory data is populated in the Avaya Customer Support (ACS) database.
   - **Are you using TAA series hardware?**
     Systems purchased under US Federal Acquisition Regulations (FAR) must comply with the requirements of the Trade America Act (TAA). For various items of IP Office hardware there are TAA compatible variants. Select this option if the IP Office system includes TAA hardware. This is usually indicated by TAA appearing on the label on the back of the system control unit.
4. Click **Register IP Office** to register the system with the the Avaya Global Registration Tool (GRT) website.
5. Once the system is registered, you can download an on-boarding file for the system from the Avaya Global Registration Tool website. This file contains the settings required to establish an SSL VPN connection between the IP Office system and an Avaya VPN Gateway (AVG) server.
6. Use the **Upload On-boarding File** section to upload the on-boarding file to the system.

Chapter 7.
Additional Processes

7. Additional Processes

This section covers the following additional installation processes:

- Enabling IP Office Web Manager 127
- Switching Off an IP Office System 128
- Rebooting an IP Office System 130
- Memory Card Removal 131
- Changing Components 133
- Swapping Extension Users 135
- Upgrading the IP Office Software 136
- Out of Building Extensions 42
- Using the External Output Port 146
- So8 BRI Modules 147
- SNMP 150
- Reset Button Usage 154
- AUX Button Usage 154
- DTE Port Maintenance 155

7.1 Enabling IP Office Web Manager

For Release 8.0+, systems running in IP Office Basic Edition - Quick Mode, IP Office Basic Edition - PARTNER® Mode or IP Office Basic Edition - Norstar Mode mode can be configured via web browser. For Release 8.1, IP Office Web Manager is also used for the on-boarding of all IP500 V2 systems for Avaya support and maintenance.

Access to the system is via its IP address and then selecting the ***IP Office Web Management*** link. This documentation covers the recommended initial configuration that can be done via web based management. Full use of web based management is covered in the IP Office Basic Edition Web Base Management manual.

In order to use IP Office Web Manager, a number of criteria as listed below must be met. Most of these are applied automatic to a new system installed with IP Office Release 8.0 or higher. However, for systems being upgraded to IP Office Release 8.0 or higher, additional upgrade steps may be required.

Enabling IP Office Web Manager

1. The IP Office Web Manager files must be present on the System SD card. This can be done in a number of way:
   - By selecting to include those files when prompted to do so while recreating the IP Office SD card 167 using IP Office Manager.
   - By selecting **Upload System Files** when upgrading the system using IP Office Manager.
2. The IP Office system security must allow IP Office Web Manager operation:
   - This is done automatically for any new system installed with IP Office Release 8.0 or higher software.
   - This is done automatically for any existing pre-IP Office Release 8.0 system during the upgrade if the system is set to use the pre-IP Office Release 8.0 default password of ***password***.
   - For any system upgraded to IP Office Release 8.0 without first being set back to the default password, either:
     - Using IP Office Manager:
       1. If not already done, select **View | Advanced View**.
       2. Select **File | Advanced | Erase Security Settings (Default)**.
       3. From the **Select IP Office** dialog, select the required system and click **OK**.
       4. Enter the user name **Administrator** and the password for that account (by default for a pre-IP Office Release 8.0 system: ***password***).
       5. IP Office Manager will confirm if the action was successful or not.
     - Default the system security settings using a DTE cable 158.

7.2 Switching Off an IP Office System

IP Office systems running IP Office Release 6.0 can be shut down in order to perform maintenance. The shut down can be either indefinite or for a set period of time after which the IP Office will automatically reboot.

During the shut down process, the current configuration in the control unit's RAM memory is copied to the control units non-volatile memory. For IP500 V2 systems that location is the System SD card.

For control units with memory cards the memory cards can be shutdown and restarted 178 separately from the system.

- **! WARNINGS**
  - A shutdown must always be used to switch off the system. Simply removing the power cord or switching off the power input may cause the loss of configuration data.
  - This is not a polite shutdown, any user calls and services in operation will be stopped. Once shutdown, the system cannot be used to make or receive any calls until restarted.
  - The shutdown process takes up to a minute to complete. When shutting down a system with a Unified Communications Module installed, the shutdown can take up to 3 minutes while the card safely closes all open files and closes down its operating system. During this period the module's LED 1 remains green.
  - When shutdown, the LEDs shown on the system are as follows. Do not remove power from the system or remove any of the memory cards until the system is in this state:
    - LED1 on each IP500 base card installed will also flash red rapidly plus LED 9 if a trunk daughter card is fitted to the base card.
    - The CPU LED on the rear of the system will flash red rapidly.
    - The System SD and Optional SD memory card LEDs on the rear of the system are extinguished.
  - To restart a system when shutdown indefinitely, or to restart a system before the timed restart, switch power to the system off and on again.

System Shutdown Using IP Office Manager

1. Using IP Office Manager, select **File | Advanced | System Shutdown**.
2. Using the **Select IP Office** menu, the **System Shutdown Mode** menu is displayed.

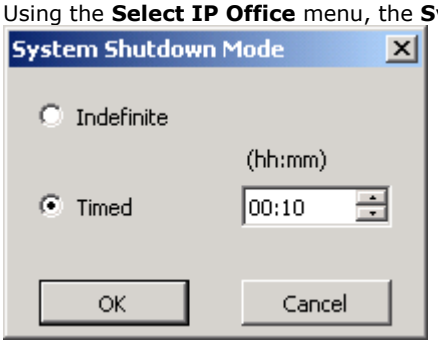

3. Select the type of shutdown required. If **Indefinite** is used, the system can only be restarted by having its power switched off and then on again. If a **Timed** shutdown is selected, the IP Office will reboot after the set time has elapsed.

System Shutdown Using the System Status Application

1. Start System Status 73 and access the IP Office's status output.
2. In the navigation panel select **System**.
3. At the bottom of the screen select **Shutdown System**.
4. Select the time duration for the shutdown or indefinite.

System Shutdown Using a System Phone

This process can be used by a user configured as a **System Phone** user and using a 1400, 1600, 2400, 4600, 5400, 5600, 9500 or 9600 Series phone (excluding XX01, XX02 and XX03 models). The user's **Login Code** is used to restrict access to system administration functions on the phone.

Unlike Manager, a system phone user cannot select an indefinite shutdown. They can set a timed shut down of between 5 minutes and 24 hours.

1. Select **Features | Phone User | System Admin**.
2. Enter your IP Office user login code.
3. From the menu select **System Shutdown**.
4. Select a time period for the shutdown. It must be in between 5 minutes and 24 hours.
5. Press **Done** and then **Confirm** to begin the shutdown.

System Shutdown Using the IP500 V2 AUX Button

When the **AUX** button is pressed for more than 5 seconds, the IP500 V2 control unit will shutdown with the restart timer set to 10 minutes.

7.3 Rebooting an IP Office System

You can use IP Office Manager to reboot an IP Office system.

Rebooting a System

1. Using IP Office Manager, select **File | Advanced | Reboot**.
2. Use the **Select IP Office** menu to locate and select the IP Office system. Enter a valid user name and password.
3. The type of reboot can then be selected.

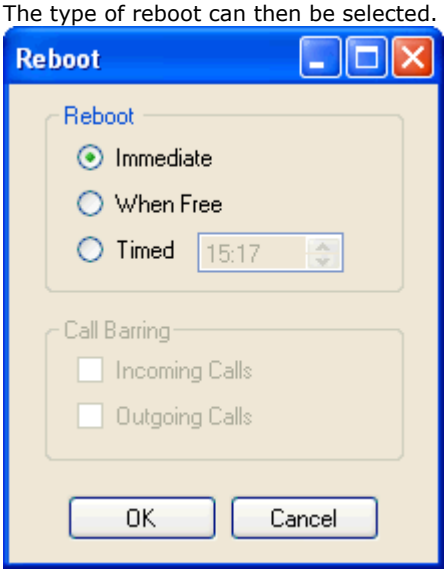

- **Reboot**
  Select when the reboot should occur.
  - **Immediate**
    Send the configuration and then reboot the IP Office.
  - **When Free**
    Send the configuration and reboot the IP Office when there are no calls in progress. This mode can be combined with the **Call Barring** options.
  - **Timed**
    The same as When Free but waits for a specific time after which it then wait for there to be no calls in progress. The time is specified by the **Reboot Time**. This mode can be combined with the **Call Barring** options.
- **Reboot Time**
  This setting is used when the reboot mode **Timed** is selected. It sets the time for the IP Office reboot. If the time is after midnight, the IP Office's normal daily backup is canceled.
- **Call Barring**
  These settings can be used when the reboot mode When Free is selected. They bar the sending or receiving of any new calls.

4. Click **OK**.

7.4 Memory Card Removal

Card Removal	Memory cards should always be shutdown 178 before being removed when the system is running. Though the card slot LEDs indicate when data is being written to an card, lack of flashing LED is not a sufficient safeguard. Shutting down the card will disable Embedded Voicemail if being used. If the **System SD** card is removed, features licensed by the card's Feature Key serial number will continue operating for up to 2 hours.

Before a memory card is removed from an IP Office system that is running, the card must be shutdown. Removing a memory card while the system is running may cause file corruption.

Card services can be restarted by either reinserting the card or using a **Start Up** command.

Card Shutdown Using IP Office Manager

1. Using IP Office Manager, select **File | Advanced | Memory Card Commands | Shutdown**.
2. Using the **Select IP Office** menu, select the IP Office system containing the memory card.
3. Click **OK**.
   - At the back of the control unit, confirm that the appropriate memory card LED is off.
   - The card can now be removed in order to perform the necessary maintenance actions.

Card Shutdown Using the System Status Application Application

1. Start System Status 73 and access the IP Office's status output.
2. In the navigation panel select **System**.
3. Select **Memory Cards**.
4. Select either **System Card** or **Optional Card**.
5. At the bottom of the screen select **Shutdown**.
   - At the back of the control unit, confirm that the appropriate memory card LED is off.
   - The card can now be removed in order to perform the necessary maintenance actions.

Card Shutdown Using a System Phone

This process can be used by a user configured as a System Phone user and using a 1400, 1600, 2400, 4600, 5400, 5600 or 9600 Series phone (excluding XX01, XX02 and XX03 models). The user's **Login Code** is used to restrict access to system administration functions on the phone.

1. Select **Features | Phone User | System Admin**.
2. Enter your IP Office user login code.
3. From the menu select **Memory Card**.
4. Select **System** for the System SD card or **Option** for the Optional SD card.
5. Select **Shutdown**.
   - At the back of the control unit, confirm that the appropriate memory card LED is off.
   - The card can now be removed in order to perform the necessary maintenance actions.

7.5 Memory Card Reinsertion

Reinserting a memory card into a system that is already switched on will automatically restart card operation. However, if the card has been shutdown but not removed, it can be restarted using Manager without requiring a reboot.

Card Startup Using IP Office Manager

1. Using IP Office Manager, select **File | Advanced | Memory Card Commands | Startup**.
2. Using the **Select IP Office** menu, select the IP Office system containing the memory card.
3. Click **OK**.

Card Startup Using the System Status Application

1. Start System Status 73 and access the IP Office's status output.
2. In the navigation panel select **System**.
3. Select **Memory Cards**.
4. Select either **System Card** or **Optional Card**.
5. At the bottom of the screen select **Start Up**.

Card Startup Using a System Phone

This process can be used by a user configured as a System Phone user and using a 1400, 1600, 2400, 4600, 5400, 5600 or 9600 Series phone (excluding XX01, XX02 and XX03 models). The user's **Login Code** is used to restrict access to system administration functions on the phone.

1. Select **Features | Phone User | System Admin**.
2. Enter your IP Office user login code.
3. From the menu select **Memory Card**.
4. Select **System** for the System SD card or **Option** for the Optional SD card.
5. Select **Startup**.

7.6 Changing Components

Except for memory cards (see Memory Card Removal 131), cards and external expansions modules must only be removed and added to an IP Office system when that system is switched off 128.

In the sections below, the term component can refer to a card fitted into the IP Office or an external expansion module.

Note that for extension ports, by default both an extension entry and a user entry will exist in the IP Office configuration. Extension entries can be deleted without deleting the corresponding user entry. This allows retention of the user settings and association of the user with a different extension by changing that extensions **Base Extension** number to match the user's **Extension ID**.

Like for Like Replacement

If replacing with a componenet of the same type no configuration changes are necessary.

1. Switch off the IP Office system 128.
2. Remove the card or external expansion module. Note the card slot or expansion port used as the replacement must be installed in the same position.
3. Install the replacement using the appropriate process for the type of component (Fitting IP500 cards 85, Adding External Expansion Modules 94).
4. Restart the IP Office system.

Higher Capacity Replacement

If replacing with a component of the same type but higher capacity, when restarted the IP Office will automatically create configuration entries for the new trunks or extensions/users.

1. Switch off the IP Office system 128.
2. Remove the card or external expansion module. Note the card slot or expansion port used as the replacement must be installed in the same position.
3. Install the replacement using the appropriate process for the type of component (Fitting IP500 cards 85, Adding External Expansion Modules 94).
4. Restart the IP Office system.
5. Use Manager to configure the new trunks or extensions/users.

Lower Capacity Replacement

If replacing with a component of the same type but lower capacity, after restarting the IP Office the configuration will need to be edited to remove redundant entries.

1. Switch off the IP Office system 128.
2. Remove the card or external expansion module. Note the card slot or expansion port used as the replacement must be installed in the same position.
3. Install the replacement using the appropriate process for the type of component (Fitting IP500 cards 85, Adding External Expansion Modules 94).
4. Restart the IP Office system.
5. Use Manager to delete the trunks or extensions/users in the configuration that are no longer supported by the component installed.

Adding a New Component

If adding a new component to an available slot or port, when restarted the IP Office will automatically create configuration entries for the new trunks or extensions/users.

1. Switch off the IP Office system 126.
2. Install the replacement using the appropriate process for the type of component (Fitting IP500 cards 85, Adding External Expansion Modules 94).
3. Restart the IP Office system.
4. Use Manager to configure the new trunks or extensions/users.

Permanent Removal

If permanently removing the component, the configuration will need to be edited to remove redundant trunk or extension/user entries.

1. Switch off the IP Office system 126.
2. Remove the card or external expansion module.
3. Restart the IP Office system.
4. Use Manager to delete the trunks or extensions/users in the configuration that relate to the component removed.
5. In the **Control Unit** section of the configuration, delete the entry for the component that is no longer present in the system.

Replacement of a Different Type

If replacing a component with one of a different type, the process should be divided into two stages. First remove the existing component using the **Permanent Removal** process above and adjust the configuration and reboot. Then install the new component using the **Adding a New Component** process above.

7.7 Swapping Extension Users

Whilst the example below shows 2 users swapping extensions the method can be used to swap multiple users within the configuration and effecting the swaps after a single merge of the configuration changes.

Swapping Extension Users

For this example User A (202) and User B (203) want to swap extensions.

1. Load the IP Office configuration and select **Extension**.
2. Locate the extension with the **Base Extension** set to ***202***, ie. matching User A's extension number.
   - If the group pane is visible (**View | Group Pane**) in IP Office Manager, it shows the extension details (ID, Module, Port and Base Extension).

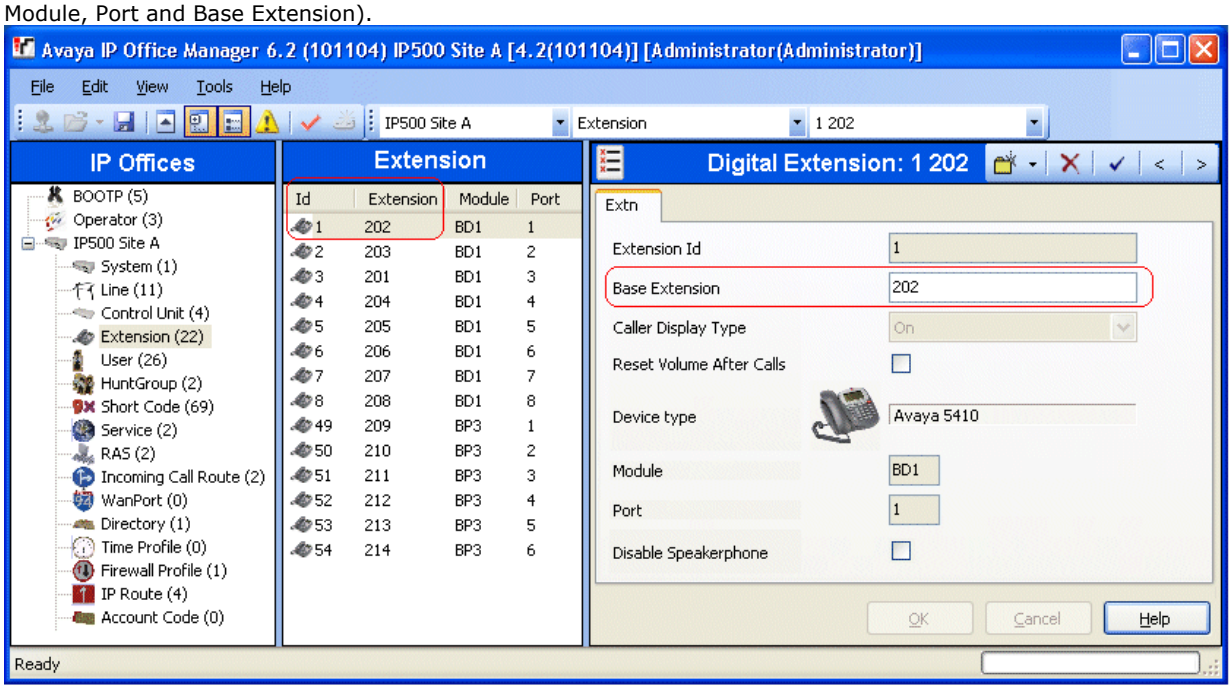

3. Select that extension and change its **Base Extension** setting to ***203***, ie. to now match User B's extension number. If IP Office Manager is set to validate edits, it will warn that this change conflicts with the existing Base Extension setting of another extension. Ignore the warning at this stage. Click **OK**.
4. Locate the other extension with the **Base Extension** set to ***203***, ie. matching User B's extension number.
5. Select that extension and change its **Base Extension** setting to ***202***, ie. to now match User A's extension number. If the error pane is visible (**View | Error Pane**), the warnings about extension conflicts should now disappear. Click **OK**.
6. Save the configuration back to the IP Office system.
7. At each of the extensions dial the log out short code set on the IP Office system. By default this is ****36***.
   - If any of the users is set to **Forced Login**, they will have to complete the login process at their new extension using their Login Code.

7.8 Upgrading the IP Office Software

The installed IP Office Manager includes IP Office software files for control units, external expansion modules and phones appropriate to the IP Office software level.

- **New IP500 V2 Systems**
  The behavior of new IP500 V2 systems depends on the level of software installed when the first call is made as follow:
  - **Pre-IP Office Release 8.0(46) or IP Office Release 8.1(52)**
    For 90 days from its first call, a new IP500 V2 control unit can run any IP Office Release supported on a IP500 V2 system without requiring an upgrade license. The highest level run is written into the control unit's memory (not the SD card) and becomes a permanent entitlement for that control unit. After 90 days, the IP500 V2 may require an upgrade license if upgraded to a software release higher than any it has run during the initial 90 day period.
  - **IP Office Release 8.0(46), IP Office Release 8.1(52) and higher**
    Systems installed with firmware 8.0(46) or 8.1(52) have no entitlement period after their first call. For those systems, even if in their first 90 day period, any subsequent upgrade to a higher major or minor release will require a software upgrade licence to be added to the system.
- **! Warning**
  Systems upgraded without the appropriate license will display *"No license available"* and will not allow any telephony functions.

The IP Office system can be upgraded in two ways:

- **Using the IP Office Manager Upgrade Wizard** 137
  The upgrade wizard is part of IP Office Manager and can be used to upgrade all types of IP Office system.
- **Upgrading the System SD Card** 139
  For IP500 V2 control units, the software on the System SD card can be upgraded by a range of methods, i.e. directly upgrading the SD card or using the upgrade wizard. When the system is rebooted it will use the new software.

WARNINGS

- **Check IP Office Technical Bulletins**
  Check the latest IP Office Technical Bulletin for the IP Office software release before proceeding any further. It may contain information relating to changes that occurred after this document was completed. Bulletins are available from http://support.avaya.com.
  - **! Web Management**
    The addition of web management using IP Office Web Manager requires changes to the security settings of systems. For new systems those changes are made automatically. However, for system being upgraded, the changes can only be made if the system's security settings are defaulted.
- **Multiple Managers**
  If more than one copy of Manager is running it is possible for the IP Office to request BIN files from a different Manager from the one that started the upgrade process. Ensure that only one copy of Manager is running when upgrading an IP Office system.
- **Other IP Office Applications**
  Upgrading the core software of the IP Office control unit will require upgrades to associated software. The levels of application software supported with the IP Office core are detailed in the IP Office Technical bulletin for the release.

7.8.1 Using the Upgrade Wizard

1. Ensure that you have a backup copy of the IP Office's configuration before performing this action. If a copy of the configuration cannot be downloaded using Manager, check the Manager application directory for previously downloaded configurations.

   a. Use Manager to download an up to date copy of the configuration. If that is not possible, check in the Manager application folder for a previous copy of the configuration.

   b. Using IP Office Manager, select **File | Open Configuration**.

   c. Using the **Select IP Office Menu**, locate and select the IP Office system. Click **OK**.

   d. Enter the name and password for a service user account on that IP Office. Click **OK**. Manager will receive and display the configuration from the IP Office.

      - If not already done, this action creates a BOOTP entry in Manager for the IP Office system.
      - This action also confirms communication between the Manager PC and the IP Office prior to any following process.

   e. Select **File | Save Configuration As...** and save a copy of the configuration file onto the PC.

2. Select **File | Advanced | Upgrade**. The UpgradeWiz is started and scans for IP Office modules using the **Unit/ Broadcast** address. Adjust this address and click **Refresh** if the expected control units are not shown.

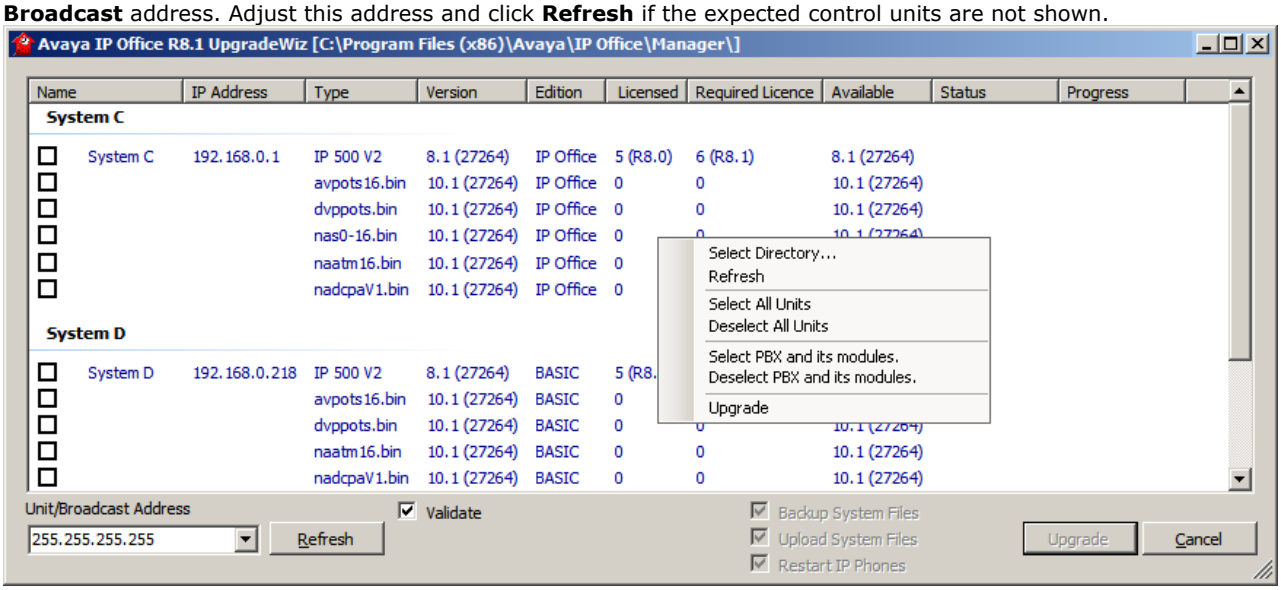

2. The information displayed depends on the type of control unit.

   - **For IP500 V2 control units**
     The current version of each IP Office .bin file held in the control units memory is shown. That is regardless of whether that .bin file is currently being used by any module in the system.
   - **For other control units**
     For the control unit and each external expansion module present in the system, the current version of software installed is displayed.

3. The **Version** column indicates the current version of software installed. The **Available** column indicates the version of software Manager has available. If the available version is higher, the check box next to that row is automatically selected.

   - If any of the modules have pre-version 2.1 software installed, an upgrade with **Validate** unticked is required. If this is the case, only continue with the upgrade process using a PC with a fixed IP address on the same LAN domain and physical LAN segment as the IP Office control unit and only upgrade the pre-2.1 system.
   - If a multi-stage upgrade is necessary, use the following additional steps to select the appropriate interim software:
     - Right-click on the upgrade wizard and click **Select Directory**. Locate and select the directory containing the bin file for the intermediate software level.
     - The upgrade wizard should now list just the control unit as having upgrade software available.
   - Upgrading to particular levels of IP Office software require a ***Software Upgrade X*** license where *X* is a number. The **Licensed** and **Required License** columns indicate the current highest upgrade license the system has and the required software upgrade license for the currently installed software.
     - It does not indicate the license requirement for the level of software in the **Available** column.
     - For IP500 V2 systems, a value of 255 indicates that the control unit is still in its initial upgrade entitlement period. See Upgrade Licenses 407.

- For Release 8.1, the maximum level of software supported by the **Licensed** and **Required License** values is also indicated in brackets.

4. For those modules which you want to upgrade, tick the check box.

5. For IP500 V2 control units, the following additional options are available:

   - **Backup System Files**
     If selected, before upgrading to the new software, the current files in the System SD cards **/primary** folder will be copied to its **/backup** folder.

   - **Upload System Files**
     If selected, the full set of software files that Manager has is copied to the **/primary** folder on the System SD card. In addition to control unit and module software this will include phone software files. Following the reboot, the phone will upgrade using those files if necessary.

   - **Restart IP Phones**
     If selected, following the upgrade and reboot, all Avaya IP phones are also restarted. This will cause them to recheck whether the firmware they currently have loaded matches that on their configured file server. Use this option if the IP Office system is the file server and the upgrade included new IP phone firmware.

6. Select **Upgrade**. The system password for each system will be requested. Enter it and click **OK**. The next steps depend on the upgrade options selected. Do not cancel or close the upgrade wizard while these processes are running.

   - **Validated Upgrade**
     If using the **Validated** option, a number of actions take place as follows;

     a. The upgrade wizard checks the amount of free RAM memory available in the control unit to temporarily store the new BIN files. If insufficient memory is available, you will be prompted whether to continue with an off-line upgrade or cancel upgrading.

        - If offline is selected, the IP Office is rebooted into offline mode. It may be necessary to use the **Refresh** option within the Upgrade Wizard to reconnect following the reboot. Validate upgrade can then be attempted to again check the amount of available RAM memory for transfer of BIN files. If the memory is still insufficient, the option is offered to either do an unvalidated upgrade or cancel.

     b. The bin files required are transferred to the system and stored in temporary memory.

     c. For IP500 V2 control units, the backup system files and upload system files actions are performed.

     d. Once all file transfers are completed, the upgrade wizard will prompt whether it okay to proceed with the upgrade process. Select **Yes** to continue.

     e. Each module being upgraded will delete its existing core software, restart and load the new software file that was transferred. This process may take several minutes for each unit.

   - **Unvalidated Upgrade**
     This method of upgrading should be avoided unless absolutely necessary. It is only required for IP Office systems with pre-2.1 software and should only be done from a Manager PC with a fixed IP address running on the same LAN segment and subnet as the IP Office system. During the upgrade the units and modules erases their current software and then request the new software file from Manager.

7. Following the upgrade check that the upgrade wizard now shows that the selected units and modules have upgraded. It may be necessary to select **Refresh** to update the information in the upgrade wizard display.

8. Repeat the process as required.

7.8.2 Using an SD Card

In addition to using the traditional IP Office Upgrade Wizard 137, IP500 V2 control units can be upgraded by loading the required set of firmware files onto the System SD card and rebooting the system.

- **! IP Office Technical Bulletins**
  Ensure that you have obtained and read the IP Office Technical Bulletin relating to the IP Office software release which you are installing. This bulletin will contain important information that may not have been included in this manual. IP Office Technical Bulletins are available from the Avaya support website *(http://support.avaya.com)*.

- **! Upgrade Licenses**
  Some upgrades may require entry of upgrade licenses. It is still possible to upgrade the system without the necessary licenses, however the system will not provide any telephony functions after the upgrade until the appropriate license is added to the system configuration.

- **! WARNING**
  This process will require the IP Office system to reboot in order to complete the process. Any current calls and services will be ended by the reboot.

There are a number of ways in which this can be done.

Method	Description	Location	Software Files	Embedded Voicemail Prompts
Using Manager 176	Using IP Office Manager, the contents of the card are compared to the files that Manager has available and are upgraded if necessary.	**Local or Remote**	✓	✓
System SD Card Upgrade 176	In this method, the System SD card is shut down and removed from the control unit. The card's contents are upgraded using IP Office Manager.	**Local**	✓	✓
Upgrade from Optional SD Card 177	This method uses an SD card loaded with the required version of IP Office software. The card is inserted into the control unit's Option SD card slot and its contents copied to the System SD card.	**Local**	✓	–

7.8.3 Upgrading 2400/5400 Phones

The firmware on most phones connected to an IP Office system is automatically upgraded if necessary when a phone is first connected to an IP Office port or for existing phones, after a system reboot. However this does not apply to Avaya 2400 Series and 5400 Series phones.

Checking the Firmware on a 2410 or 5410 Phones

1. Press **Exit** to ensure that the phone has exited any other usage mode.
2. Press either of the display keys next to **MENU**.
3. Select **OPTION**.
4. Select **Self Test**. The display should now show details of the phone's currently installed firmware.

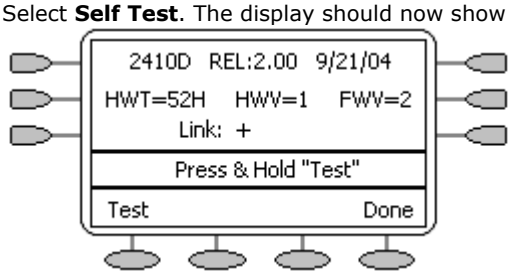

5. The firmware loaded into the phones has a major and minor version. The Major version in the example above is shown as **FWV=2** and the minor version is shown as **REL:2.00**.
6. Press **Exit** to exit self test mode.

Checking the Firmware on a 2420 or 5420 Phones

1. Select **OPTION**.
2. Select **Self Test**. The display should now show details of the phone's currently installed firmware.

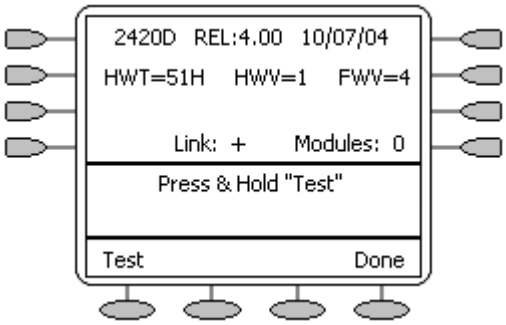

3. The firmware loaded into the phones has a major and minor version. The Major version in the example above is shown as **FWV=4** and the minor version is shown as **REL:4.00**.
4. Press **Done** to exit self test mode.

Procedure: Forcing a Software Upgrade

- The following procedure should only be used if it has been determined that the 2400/5400 Series phones need to be manually forced to change their firmware. During this process the phone cannot be used.
- For the IP Office 4.1 Q1 2008 maintenance release and higher, using the batch file to enable the phones to upgrade their firmware is ignored unless the No User user Source Number of ALLOW_5410_UPGRADES is added to the IP Office configuration.

1. Locate the Manager program directory and within it the files **turn_on.bat** and **turn_off.bat**.
2. Right-click on **turn_on.bat** and select **Edit**.
3. Locate the entry ***<IP Address>*** and replace this with the IP address of the IP Office system.
4. Close the file and save the changes.
5. Repeat steps 2 to 4 for the file **turn_off.bat**.
6. Ensure that Manager is running and is enabled to run as a TFTP Server. Manager acts as the TFTP server from which the phones will request firmware files.
7. Double-click on the file **turn_on.bat**.
8. A prompt window should appear asking you to wait and eventually, if successful, **Press any key to continue**.
9. Within Manager, select **File | Advanced | Reboot** and reboot the IP Office system.
10. Following the system restart, the 2400 and 5400 Series phones will display **Upgrading firmware**, please wait and then **FIRMWARE UPDATE IN PROGRESS**.
11. Once all the phones have completed their upgrade, double-click on **turn_off.bat**.

7.9 Out of Building Telephone Installations

The following are the only supported scenarios in which wired extensions and devices outside the main building can be connected to the IP Office system. In these scenarios, additional protection, in the form of protective grounding and surge protectors, must be fitted.

- **WARNING**
  The fitting of additional protection does not remove the risk of damage. It merely reduces the chances of damage.

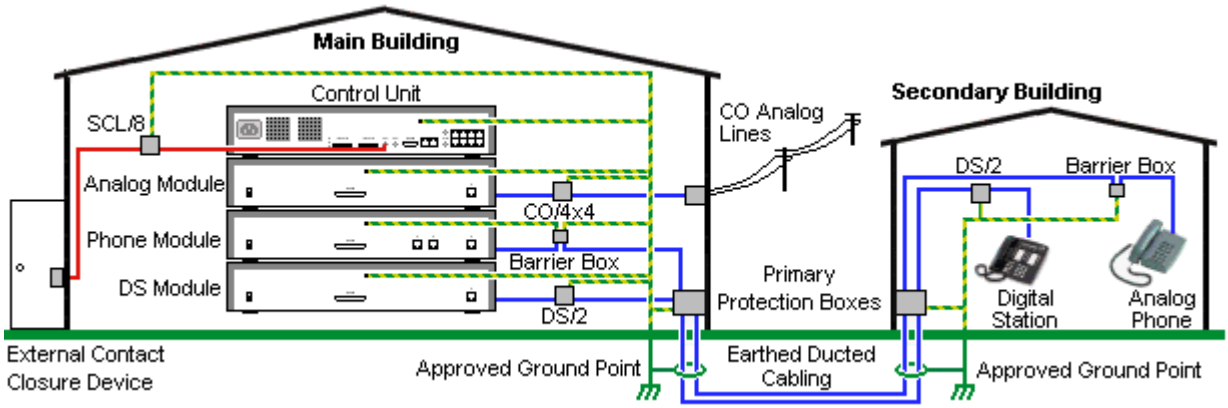

- Cables of different types, for example trunk lines, phone extensions, ground and power connections, should be kept separate.
- All cabling between buildings should be enclosed in grounded ducting. Ideally this ducting should be buried.
- A Primary Protection Box must be provided at the point where the cables enter the building. This should be three point protection (tip, ring and ground). Typically this would be gas tube protection provided by the local telephone company. The ground wire must be thick enough to handle all the lines being affected by indirect strike at the same time.

Connection Type	Protection Device Type	Requirement
Analog Phone Extensions Phones External expansion module (POT 40 or PHONE 40) ports only.	**IP Office Barrier Box** 144 Supports a single connection. Maximum of 16 on any expansion module.	• Connection from the expansion module to the phone must be via a surge protector at each end and via the primary protection point in each building. • The IP Office external expansion modules, control unit and IROB devices must be connected to the protective ground point in their building. • The between building connection must be via earthed ducting, preferable underground. The cable must not be exposed externally at any point.
DS Phone Extensions	**ITWLinx towerMAX DS/2** 145 Supports up to 4 connections. This device was previously referred to as the Avaya 146E.	
TCM Phone Extensions	None	Currently not supported.
Analog Trunks	**ITWLinx towerMAX CO/4x4** 145 Supports up to 4 two-wire lines. This device was previously referred to as the Avaya 146C.	For installations in the Republic of South Africa, the fitting of surge protection on analog trunks is a requirement. For other locations where the risk of lightning strikes is felt to be high, additional protection of incoming analog trunks is recommended.
External Output Switch	**ITWLinx towerMAX SCL/8** This device was previously referred to as the Avaya 146G.	Connections from an IP Office Ext O/P port to an external relay device must be via a surge protector.

The towerMAX range of devices are supplied by ITWLinx (http://www.itwlinx.com).

7.9.1 DS Phones

When digital phone extensions are required in another building, additional In-Range Out-Of-Building (IROB) protective equipment must be used. For phones connected to IP Office DS 395 ports, the supported device supplied by ITWLinx is a towerMAX DS/2 module. This IROB device was previous badged by Avaya as the 146E IROB.

- **! WARNING**
  This device is not supported for TCM port connections, ie. 4100 Series, T-Series, 7400 Series and M-Series phones.

The protection device should be installed as per the instructions supplied with the device. The ground points on the IP Office control unit and any external expansion modules must be connected to a protective ground using 18AWG wire with a green and yellow sleeve.

Typically the IROBs 2 RJ45 EQUIPMENT ports are straight through connected to the 2 RJ45 LINE ports. This allows existing RJ45 structured cabling, using pins 4 and 5, to be used without rewiring for up to two DS connection. However, each of these ports can be used to connect a second extension using pins 3 and 6.

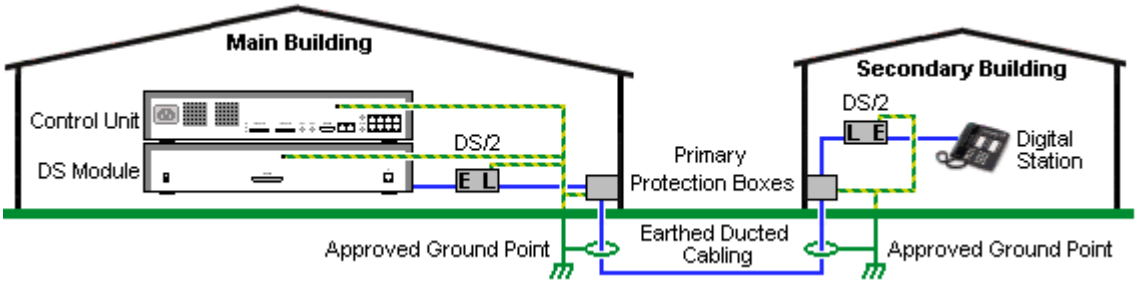

LINE		Signal		EQUIPMENT	
RJ45 8 1	1	Not used.	Ground; LINE; EQUIPMENT	1	RJ45 8 1
	2	Not used.		2	
	3	Ring II (Optional)		3	
	4	Ring I		4	
	5	Tip I		5	
	6	Tip II (Optional)		6	
	7	Not used.		7	
	8	Not used.		8	

7.9.2 Analog Phone Barrier Box

Where analog phone extensions are required in another building, additional protective equipment must be used, in the form of IP Office Phone Barrier Boxes and protective earth connections.

- ⚠ **CAUTION**
  PHONE (POT) ports on the front of control units must not be used for extensions that are external to the main building.
- The correct IP Office specific barrier boxes must be used. These modules have been designed specifically for the signalling voltages used by the IP Office system:
  - Only the IP Office Phone Barrier Box should be used with Phone V1 modules.
  - Only the IP Office Phone Barrier Box V2 should be used with Phone V2 modules.
  - No other type of analog phone barrier box should be used.
- Where more than 3 barrier boxes are required in a building, they must be rack mounted using a Barrier Box rack mounting kit 145.
- A maximum of 16 barrier boxes can be used with any Phone module.
- The Phone Barrier Box does not connect the ringing capacitor in Phone V1 modules.

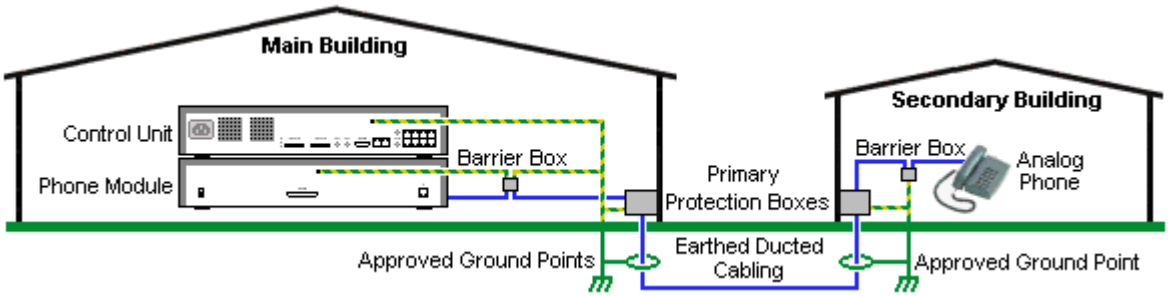

Main Building	Barrier Box	Secondary Building
• **RJ11** Connect to PHONE (POT) port on the Phone module using cable supplied with the barrier box. • **RJ45** Connect to the secondary building barrier box via primary protection in both buildings.	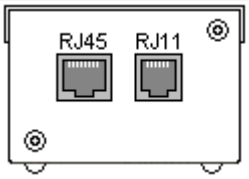	• **RJ11** Connect to analog phone. Cable not supplied. • **RJ45** From main building via primary protection in both buildings.
• **Center Screw** Connect to main building protective ground (or ground terminal of Barrier Box Rack Mounting Kit). Use 18AWG (minimum) wire with a green and yellow sleeve. • **Right-Hand Screw** Connect to ground point on Phone module using ground cable supplied with barrier box.	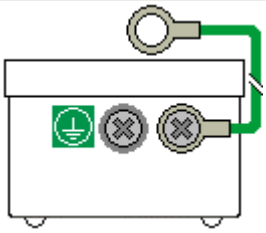	• **Center Screw** Connect to main building protective ground. Use 18AWG (minimum) wire with a green and yellow sleeve. • **Right-Hand Screw** Not used.

1. The following wires must be kept apart, that is not routed in the same bundle:
   - Earth leads from the barrier box to the Phone modules.
   - Internal wires, for example extension leads going directly to the Phone modules.
   - Wires from external telephone going directly to the barrier boxes.

IP Office Barrier Boxes		SAP Code
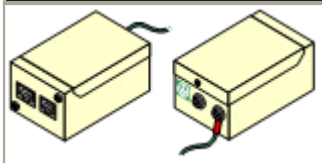	**IP400 Phone Barrier Box (81V)** Use with Phone V1 module. Includes an RJ45 to RJ11 cable and a functional earth lead.	700293897
	IP400 Phone Barrier Box V2 (101V) Use with Phone V2 module. Includes an RJ45 to RJ11 cable and a functional earth lead.	700385495
	Barrier Box Rack Mounting Kit	700293905

7.9.3 Rack Mounting Barrier Boxes

Where more than 3 Phone Barrier Boxes are used they must be rack mounted. The Barrier Box Rack Mounting Kit (SAP Code 700293905) supports up to 8 Phone Barrier Boxes.

1. Unscrew the two screws arranged diagonally at the front of each barrier box and use these same screws to reattach the barrier box to the rack mounting strip.
2. Each barrier box is supplied with a solid green ground wire connected to its functional ground screw. Remove and discard this wire. Connect a green/yellow ground wire to the protective earth screw in the center of the Point on the back of the Barrier Box.

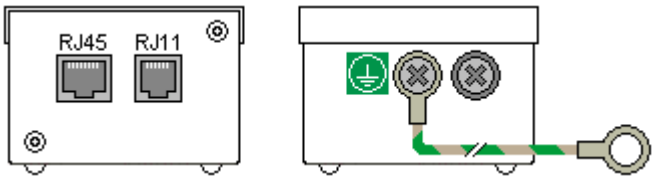

3. The rack mounting strip has threaded M4 earthing pillars. Connect the other end of the barrier box ground wire, using M4 washers and nuts, to the earthing pillar on that side of the rack mounting strip.

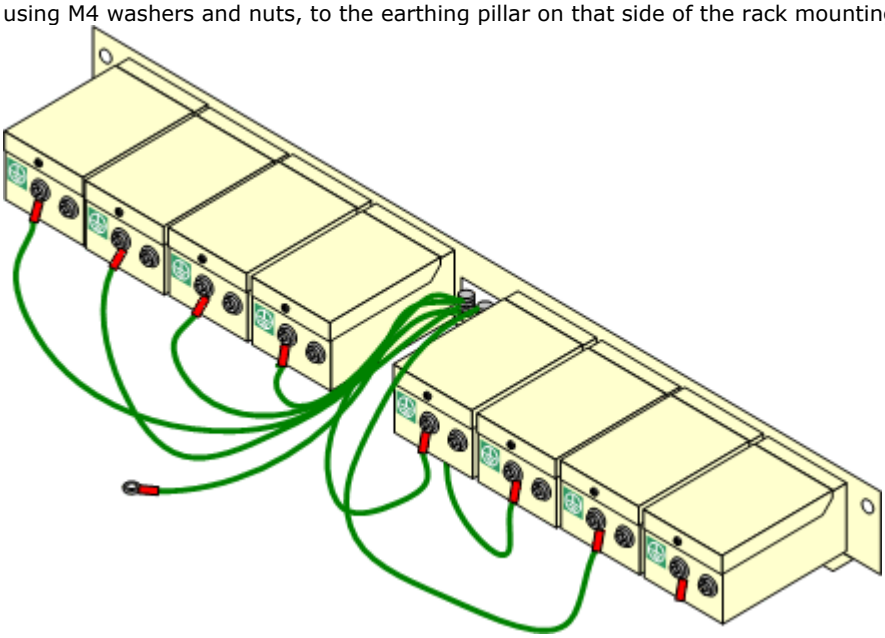

4. Using 14AWG wire with green and yellow sleeve, connect one of the earthing pillars to the buildings protective earth.
5. Using 14AWG wire with green and yellow sleeve, connect the other earthing pillar to the Phone module.
6. Ensure that the following wires are not routed together in the same bundle:
   - Earth lead from the barrier box to the Phone module.
   - Internal wires, e.g. wires going directly to the Phone module.
   - Wires from external telephone going directly to the barrier boxes.

7.10 Using the External Output Port

All the IP Office control units are equipped with a EXT O/P port. The port is marked as EXT O/P and is located on the back of the control unit adjacent to the power supply input socket.

The port can be used to control up to two external devices such as door entry relay switches. The usual application for these switches is to activate relays on door entry systems. However, as long as the criteria for maximum current, voltage and if necessary protection are met, the switches can be used for other applications.

The switches can be switched closed, open or pulsed (closed for 5 seconds and then open). This can be done in a number of ways:

- Using IP Office short codes.
- Through the **Door Release** option in IP Office SoftConsole.
- Via the **Open Door** action in Voicemail Pro.

Default Short Codes
The following are the default short codes in the IP Office configuration for external output switch operation. They use the short code features Relay On (closed), Relay Off (open) and Relay Pulse.

State	Switch 1	Switch 2
Closed	*39	*42
Open	*40	*43
Pulse	*41	*44

7.10.1 Port Connection

These ports are found on the rear of all IP Office control units. They are used for connection to external switching relays. The port uses a standard 3.5mm stereo jack plug for connection.

The IP Office is able to open (high resistance), close (low resistance) or pulse (close for 5 seconds and then open) two switches within the port. Either switch can be operated separately. These switches are intended for activation of external relays in systems such as door opening systems.

- **CAUTION:** In installations where this port is connected to a device external to the building, connection must be via a towerMAX SCL/8 Surge Protector and a protective ground connection must be provided on the IP Office control unit.

EXT O/P	Pin	Description
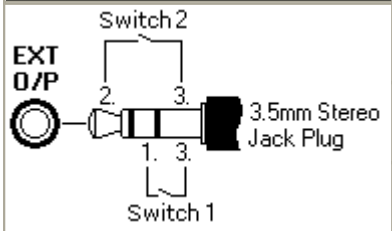	1	Switch 1.
	2	Switch 2.
	3	0 Volts (Ground/Chassis)

- Switching Capacity: 0.7A.
- Maximum Voltage: 55V d.c.
- On state resistance: 0.7 ohms.
- Short circuit current: 1A.
- Reverse circuit current capacity: 1.4A.
- Ensure that pins 1 and 2 are always at a positive voltage with respect to pin 3.

3.5mm stereo audio jack plugs are frequently sold as pre-wired sealed modules. It may be necessary to use a multi-meter to determine the wiring connections from an available plug. Typically 3 (common to both relays) is the cable screen.

7.11 So8 BRI Module

7.11.1 Example 1: ISDN Terminal

In this example, calls on DID 123456 are routed to the first port of the So8 expansion module. That port has been configured as Line Group ID 701.

1. **Configure an Incoming Call Routing**
   The destination is a short code that directs the call to the line group ID that contains the So lines. The **Bearer Capability** has been set to ***Any***, to allow data and voice via this route.
   - **Line Group ID:** 0
   - **Incoming Number:** 123456
   - **Destination:** 123456
   - **Bearer Capability:** Any
2. **Create a System Short Code:**
   This is the destination used in the Incoming Call Route.
   - **Short Code:** 123456
   - **Telephone Number:** 123456
   - **Line Group ID:** 701
   - **Feature:** Dial
3. Send the configuration to the Control Unit.

Any call coming into the main system on DID 123456 will now be passed directly to the first port.

If you wish to assign DIDs from your main pool to individual ports and avoid network charges when dialing between them, try variations on the following:

1. You have DID ranges, for example: 7325551000 to 7325551099. You wish to assign 7325551000-19 to port 1 and 7325551020-20 to port 2 etc.
2. Configure Incoming Call Route:
   The # is used here instead of "n" to avoid problems with "Main". The minus sign means the number is processed from the left and so will wait for the whole number.
   - Line Group ID: 701
   - Incoming Number: -100x
   - Destination: #
3. Repeat for Line Group ID 702 etc.
4. Create Short codes, for example:
   - Short Code: 100x
   - Telephone Number: .
   - Line Group ID: 701
   - Feature: Dial

S0 calls dialed without the area code are handled locally without network charges. Calls with area calls will go via the network.

7.11.2 Example 2: Video Conference

In this example, calls are routed to a Polycom Viewstation module connected to a S0 port of the IP Office system.

The following settings were used on 4 incoming data channels of a PRI line:

- Line Number: 5
- Channel Allocation: 23 -> 1
- Switch Type: 5ESS
- Line Sub Type: PRI
- Provider: AT&T
- Channels: 1-4
- Incoming Line Group: 95
- Outgoing Line Group: 95
- Direction: Bothway
- Bearer: Data
- Service: Accunet (this is a important)
- Admin: In Service

To route an incoming video call on the PRI lines configured above to an SO8 module requires the following:

1. Create a dial short code that has the SO port as its destination Line Group. For this example the following was used:
   - Short Code: 1500
   - Number: .
   - Feature: Dial
   - Line Group: 601 (the SO8 port number)
2. Create an Incoming Call Routing that routes the appropriate calls to that short code. For this example the following was used:
   - Line Group: 95 (identifies calls using the PRI lines configured above)
   - Destination: 1500 (the short code created above)
   - Bearer: Any

To allow the video device on the S0 port to make outgoing calls to the PRI lines also requires a short code.

1. For this example the following was used:

- Code: 91N;
- Number: N
- Feature: Dial
- Line Group: 95

Polycom Video Module Settings
The Polycom modules used in the previous example were the Viewstation 128, Viewstation 256 and Viewstation MP.

The Polycom module must have software that supports 'Standard ETSI ISDN' (European ISDN) and have its ISDN Switch Protocol setting set to 'Standard ETSI Euro-ISDN'

The following were the settings used during testing:

Characteristics	Admin/Software and Hardware/Software
• Polycom View Station 512 MP. • NTSC UIS Interface. • View Station PVS 1419.	• Software: 7.0.1. • Network Interface: S/T Interface. • ISDN Version: IEUS v18:a00320
Admin/General Setup	**Admin/Video Network/ISDN Video Network**
• Country: USA • Language: English (USA) • Auto Answer: Yes • AllowDial: Yes • Allow User Setup: Yes • Maximum Time on Call: 480.	• Country Code: 1 • Area Code: 732 • Number A: blank • Number B: blank • ISDN Switch Protocol: Standard ETSI Euro-ISDN.
User Setup	**Admin/Video Network/IMUX**
• Auto Answer: Yes • PIP: Auto • Far Control of Near Camera: Yes • MP Mode: Auto	• Numbers: blank • SPID: blank • Audio Quality: 168KB/s • Advanced Dialing: Dial Channels in Parallel
System Information	**Admin/Software and Hardware/Hardware**
• Release: 7.0.1 • Model: VS: 512	• Camera: NTSC • Video Comm Interface: ISDN_Quad_BRI • Network Interface Type: S/T Interface
Admin/Video Network	**Admin/Video Network/Call Preference**
• MultiPoint Setup: Auto	• ISDN Video Calls (H:320): Yes

7.12 SNMP

SNMP (Simple Network Management Protocol) is a standard network protocol that allows the monitoring and management of data devices across a network. An SNMP agent can be built into network devices such as routers and hubs. An SNMP manager application, for example CastleRock or HP OpenView, can then communicate with those devices.

IP Office 2.0 and above supports SNMP communication. This communication can be:

- **Polling:**
  Some SNMP applications (called "managers") send out polling messages to the network. They then record the responds of any SNMP enabled devices (called "agents"). This allows the application to create a network map and to raise an alarm when devices previously present do not respond.
  - Most SNMP manager applications can also do simple IP address polling to locate non-SNMP enabled devices. However this method of polling does not identify the device type or other information.
  - SNMP polling including details about the responding device. For example an IP Office control unit's response includes the control unit type, level of software, routing table information, up time, etc.
- **Traps:**
  When certain events occur, a devices SNMP agent can send details of the event to the SNMP manager. This is called an SNMP 'trap'. These appear in the event log of the SNMP manager. Most SNMP managers can be configured to give additional alerts in response to particular traps.
- **Management:**
  Some SNMP agents support device management and configuration changes through the SNMP manager interface. This is not supported by IP Office.

IP Office SNMP operation has been tested against Castle Rock SNMPc-EE 5.1.6c and HP OpenView Network Node Manager 6.41.

What Information is Available Via SNMP

As described above, SNMP information can either be polled by the SNMP application or received as the result of the IP Office sending SNMP trap information.

While the ***.mib*** files should not be edited, they can be read using a text editor and contain descriptions of all the various information objects that can be polled or sent and the information tha each object will include. For a list of the ***.mib*** files, see Installing the IP Office MIB Files 151. The ***NOTIFICATION-TYPE*** objects are those used for SNMP traps 153, the other types of objects are those that can be polled 153.

7.12.1 Installing the IP Office MIB Files

To allow full communication between an SNMP agent and an SNMP manager, the SNMP manager must load MIB files (Management Information Base) specific to the SNMP agent device and the features it supports. These MIB files contain details of the information the agent can provide and the traps that it can send. Full details of the structure of the IP Office MIB files, MIB groups within those files and event traps can be found in the "IP Office Installation Manual".

The MIB files for IP Office operation are included on the IP Office DVD in the folder ***\AdminCD\smnp_mibs***. The actual files required and the method of loading depend on the SNMP manager application being used. The details below cover the two SNMP manager applications tested.

HP Open View Network Node Manager

1. Copy the following MIB files to the applications MIBs folder.

	MIB File	Source
a.	rfc2737-entity-mib.mib	snmp_mibs\standard folder on OpenView Install CD.
b.	avayagen-mib.mib	\AdminCD\snmp_mibs\IPOffice folder on IP Office Admin DVD.
c.	ipo-prod-mib.mib	\AdminCD\snmp_mibs\IPOffice folder on IP Office Admin DVD.
d.	ipo-mib.mib	\AdminCD\snmp_mibs\IPOffice folder on IP Office Admin DVD.
e.	inet-address-mib.mib	\AdminCD\snmp_mibs\Standard folder on IP Office Admin DVD.
f.	rfc2213-integrated-services-mib.mib	\AdminCD\snmp_mibs\standard folder on OpenView Install CD.
g.	diffserv-dscp-tc.mib	\AdminCD\snmp_mibs\Standard folder on IP Office Admin DVD.
h.	diffserv-mib-hpov.mib	\AdminCD\snmp_mibs\Standard folder on IP Office Admin DVD.
i.	ipo-phones-mib.mib	\AdminCD\snmp_mibs\IPOffice folder on IP Office Admin DVD.

2. Start the OpenView Network Node Manager console.
3. Select Options and then Load/Unload MIBs: SNMP.
4. Select Load and select all the MIB files listed above.
5. Select Compile.

CastleRock SNMPc 5.1.6c and earlier

1. Copy the following MIB files to the applications MIBs folder, normally C:\Program Files\SNMPc Network Manager\mibfiles.

	MIB file	Source
a.	ENTITY-MIB	\AdminCD\snmp_mibs\Standard on IP Office Admin DVD.
b.	AVAYAGEN-MIB.mib	\AdminCD\snmp_mibs\IPOffice on IP Office Admin DVD.
c.	IPO-PROD-MIB.mib	\AdminCD\snmp_mibs\IPOffice on IP Office Admin DVD.
d.	IPO-MIB.mib	\AdminCD\snmp_mibs\IPOffice on IP Office Admin DVD.
e.	INET-ADDRESS-MIB.mib	\AdminCD\snmp_mibs\Standard on IP Office Admin DVD.
f.	INTEGRATED-SERVICES-MIB	\AdminCD\snmp_mibs\Standard on IP Office Admin DVD.
g.	DIFFSERV-DSCP-TC.mib	\AdminCD\snmp_mibs\Standard on IP Office Admin DVD.
h.	DIFFSERV-MIB.mib	\AdminCD\snmp_mibs\Standard on IP Office Admin DVD.
i.	IPO-PHONES-MIB.mib	\AdminCD\snmp_mibs\IPOffice on IP Office Admin DVD.

2. In SMNPc select Config | MIB Database.
3. Select Add and select the MIB files listed above in the order listed.

CastleRock SNMPc V5.0.1

The MIB installation instructions provided above are correct for CastleRock SNMPc V5.0.8 and later. For V5.0.1 of CastleRock SNMPc the following must be carried out:

1. Copy all of the IP Office MIBs and standard MIBs from the IP Office Administrator Applications DVD to the SNMPc mibfiles directory.
2. In the SNMPc mibfiles directory open the files STANDARD.mib and SNMPv2-SMI.mib in Notepad.
3. In the SNMPv2-SMI.mib file find the definition of zeroDotZero and copy this to the clipboard.
4. In the STANDARD.MIB file find the SNMPv2-SMI section and paste in the definition of zeroDotZero from the clipboard before the end of this section (just before the END statement).
5. Save the modified STANDARD.MIB file.
6. Add the MIB file SNMP-FRAMEWORK-MIB.mib to the MIB database using the instructions provided in the IP Office installation guide.
7. Add all the MIB files listed in the instructions provided in the IP Office installation guide in the order given.
8. Compile the MIBs ready for use.

The reason for this is: The IPO-PHONES-MIB.mib relies upon the DIFFSERV-MIB.mib for the definition of the textual convention of IndexInteger. The DIFFSERV-MIB needs the definition of the textual convention zeroDotZero which is normally defined in SNMPv2-SMI.mib. However including SNMPv2-SMI.mib in the MIB file compilation list results in errors due to conflicts with what appear to be internal definitions within SNMPc and the SNMPv2-SMI section in its STANDARD.mib file. Therefore to resolve the issue the required definition of zeroDotZero must be placed in the SNMPv2-SMI section in SNMPc's STANDARD.mib file.

7.12.2 Enabling SNMP and Polling Support

In order for the IP Office control unit to be discovered and polled by an SNMP manager, its SNMP agent must be enabled and placed in the same read community as the SNMP manager.

1. In Manager, receive the control unit's configuration.
2. Double-click **System** from the Configuration Tree panel and select the SNMP tab.
3. Tick **SNMP Enabled**.
4. In SNMP Port, enter the UDP port number used by the IP Office SNMP agent to listen for and respond to SNMP traffic. The normal default is 161.
5. In **Community (Read-only)**, enter the community to which the device belongs for read access. This community name must match that used by the SNMP manager application when sending requests to the device. The community public is frequently used to establish communication and then changed (at both the SNMP agent and manager ends) for security.
6. Click **OK**.
7. Send the configuration back to the IP Office and select reboot.
8. Following the IP Office reboot, the SNMP manager should be able to discover the control unit.
9. The control unit's response will include details of the control unit type and the current level of core software.

7.12.3 Enabling SNMP Trap Sending

In Manager, receive the control unit's configuration.

1. Double-click System from the Configuration Tree panel and select the SNMP tab.
2. Ensure that SNMP Enabled is ticked.
3. Using either Trap Destination 1 or Trap Destination 2, enter the following information:
   - Enter the IP Address of the PC running the SNMP manager application.
   - Enter the Port on which the traps messages should be sent. This is the UDP port on which the IP Office sends SNMP trap messages. The default is 162.
   - Set the Community that will be used by the agent and the SNMP manager. The community public is frequently used to establish communication and then changed (at both the SNMP agent and manager ends) for security.
4. Select the **Events** which should be sent:
   - **Generic:**
     Events such as soft reboot (warm start), hard reboot (cold start), links up/down (transition in the status of a PPP or frame relay interface) or SNMP community mismatch.
   - **Entity:**
     Failures, errors and changes of state in IP Office modules and trunk interfaces. Note: Does not include ATM4.
   - **Licence:**
     Changes of state in the communication with the Feature Key Server.
   - **Phone Change:**
     Changes to the type of DS or IP phone connected to a port.
   - Click on **OK**.
5. Send the configuration back to the IP Office and select reboot.

7.13 Reset Button

The IP500 and IP500 V2 control units have a **Reset** button. Pressing the button while the control unit is starting up will pause the start up until the button is released. The effect of pressing the button during normal operation will depend on how long the button is pressed and is indicated by the CPU LED.

Press Duration (seconds)	CPU LED	Action	Summary
0 to 5.	**Off**	**None**	None.
5 to 10.	**Orange**	**Reboot When Free**	Reboot when free with new incoming/outgoing call barring. A reboot using the reset button is recorded in the Audit Trail.
10 to 30.	**Flashing orange**	**Erase Configuration/ Immediate Reboot**	Erase the configuration, alarm log and audit trail. Immediate reboot without waiting for active calls to end. See Erasing the configuration 156 for full details.
30 to 40.	**Red**	**Erase All.**	Erase configuration, alarm log and core software. See Erasing the Operational Software 159 for full details.
Over 40.	**Flashing green**	**None**	None.

7.14 AUX Button

IP500 V2 control units have an AUX button. This button can be used as follows.

If pressed during a restart of the control unit, the control unit skip booting 165 from the ***/primary*** folder on the System SD card. If pressed for more than 5 seconds when a system is running, the control unit will shutdown 128 for 10 minutes.

7.15 DTE Port Maintenance

The DTE port on the back of IP Office control units is not normally used when configuring an IP Office system. However, in extreme cases, the DTE port can be used to default the system's configuration or to erase it core software if necessary.

- ⚠ **WARNING**
  Due to the nature of the actions in this section, they should only be performed if absolutely necessary to return a system back to working order. In all cases, you must make every effort to ensure that you have a backup copy of the system configuration.
- The DTE ports on IP Office expansion modules are not used for any maintenance or diagnostics.

7.15.1 DTE Port Settings

These ports are found on the rear of all IP Office control units and external expansion modules. The DTE ports on external expansion modules are not used.

The RS232 DTE ports on the control units can be used for system maintenance and connection of serial terminal adaptors. On IP400 control units the port can also be used for connection of the IP Office serial port licence key dongle.

An asynchronous terminal program such as HyperTerminal is also required. Configure this for operation via a PC serial port, as follows:

Bits per second	38,400	**Parity**	None	**Flow Control**	None
Data bits	8	**Stop Bits**	1	**Settings | Emulation**	TTY

DTE Cables
These cables are used for system maintenance and diagnostics under Avaya guidance. They can also be used for connection of RS232 serial terminal adaptor equipment to the IP Office control unit. The cable required depends on the IP Office control unit. This cable is a "Straight through DB9 female to DB9 male serial cable".

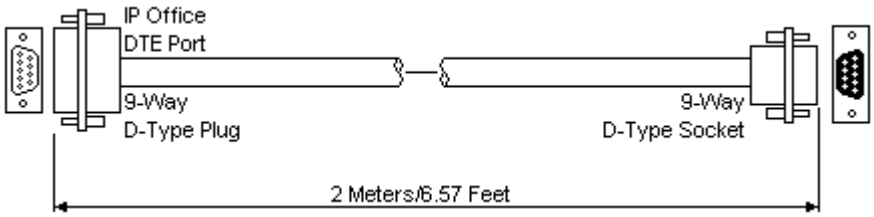

IP Office 9-Way RS232 DTE Port	Signal	PC/Terminal Adaptor
3	⬅ Receive data	3
2	➡ Transmit Data	2
7	⬅ RTS (Request To Send)	7
8	➡ CTS (Clear To Send)	8
6	➡ DSR (Data Set Ready)	6
5	● Ground	5
1	➡ DCD (Data Carrier Detect)	1
4	⬅ DTR (Data Terminal Ready)	4
9	➡ RI (Ring Indicator)	9

7.15.2 Erasing the Configuration

The following processes erases the configuration held in the IP Office control unit's memory. That include both the current configuration being used in RAM memory and the backup configuration stored in non-volatile memory. Following this the IP Office will restart with a default configuration.

This process should be performed from a PC with a fixed IP address, directly connected to the IP Office control unit and with the IP Office system disconnected from any network. Following this process, the control unit's IP address will default to 192.168.42.1.

- ⚠ Do not perform any of these processes unless absolutely necessary. The IP Office's configuration settings can be default through Manager using the **File | Advanced | Erase Configuration** command.
- For IP Office Release 7.0 and higher, IP500 V2 systems using **IP Office A-Law** or **IP Office Mu-Law** System SD cards will default to IP Office Basic Edition - Quick Mode. Loading the configuration will switch IP Office Manager to simplified view. To change the system back to operating in IP Office Essential Edition, select the **File | Advanced | Change Mode**.

Erasing the Configuration via Debug

This process erases the IP Office's configuration settings but does not alter its security settings. It is easier to use than the boot loader method.

1. Ensure that you have a backup copy of the IP Office's configuration before performing this action. If a copy of the configuration cannot be downloaded using Manager, check the Manager application directory for previously downloaded configurations.
   a. Use Manager to download an up to date copy of the configuration. If that is not possible, check in the Manager application folder for a previous copy of the configuration.
   b. Using IP Office Manager, select **File | Open Configuration**.
   c. Using the **Select IP Office Menu**, locate and select the IP Office system. Click **OK**.
   d. Enter the name and password for a service user account on that IP Office. Click **OK**. Manager will receive and display the configuration from the IP Office.
      - If not already done, this action creates a BOOTP entry in Manager for the IP Office system.
      - This action also confirms communication between the Manager PC and the IP Office prior to any following process.
   e. Select **File | Save Configuration As...** and save a copy of the configuration file onto the PC.
2. Attach the serial cable between the PC and the DTE port on the IP Office control unit.
   a. Start the terminal program on your PC. Ensure that it has been setup as listed in DTE Port Settings 155. Within a HyperTerminal session, the current settings are summarized across the base of the screen.
   b. Enter **AT** (note upper case). The control unit should respond ***OK***.
   c. Enter **AT-DEBUG**. The control unit should response with the time and date and then ***Hello>*** to show it is ready to accept commands.
3. To erase the current configuration in RAM memory enter **eraseconfig**. The ***Hello>*** command prompt reappears when the action is completed.
4. To erase the backup configuration stored in non-volatile Flash memory enter **erasenvconfig**. The ***Hello>*** command prompt reappears when the action is completed.
5. To reboot the IP Office enter **reboot**. The IP Office will reboot and restart with a defaulted configuration.
6. Close the terminal program session.
7. Manager can now be used to alter and then upload an old configuration file or receive and edit the control unit's now defaulted configuration.

Erasing the Configuration and Security Settings via the Boot Loader

This process defaults the IP Office security settings and its configurations settings.

2. Ensure that you have a backup copy of the IP Office's configuration before performing this action. If a copy of the configuration cannot be downloaded using Manager, check the Manager application directory for previously downloaded configurations.

   f. Use Manager to download an up to date copy of the configuration. If that is not possible, check in the Manager application folder for a previous copy of the configuration.

   g. Using IP Office Manager, select **File | Open Configuration**.

   h. Using the **Select IP Office Menu**, locate and select the IP Office system. Click **OK**.

   i. Enter the name and password for a service user account on that IP Office. Click **OK**. Manager will receive and display the configuration from the IP Office.

      - If not already done, this action creates a BOOTP entry in Manager for the IP Office system.
      - This action also confirms communication between the Manager PC and the IP Office prior to any following process.

   j. Select **File | Save Configuration As...** and save a copy of the configuration file onto the PC.

2. Attach the serial cable between the PC and the DTE port on the IP Office control unit.

   a. Start the terminal program on your PC. Ensure that it has been setup as listed in DTE Port Settings 155. Within a HyperTerminal session, the current settings are summarized across the base of the screen.

   b. Arrange the program windows so that the Terminal program and Manager TFTP Log are visible at the same time.

   c. Switch off power to the IP Office control unit.

   d. Power on the control unit and press the escape key every second until you get a Loader message. Below is an example.

```
P12 Loader 2.4
CPU Revision 0x0900
```

   e. Enter **AT** (note upper case). The control unit should respond ***OK***.

   f. If an OK response is not received, check the settings of your terminal program and repeat the process above.

3. Proceed with the erasure process.

   - To erase the alarm log enter ***AT-X1***.
   - To erase the current configuration, enter ***AT-X2***. A typical response if ***Sector 2 Erase (NV Config)*** followed by ***OK***. Enter ***AT-X3***. A typical response is ***Sector Erases (Config)*** followed by a series of ***OK*** responses.

4. Switch power to the control unit off and then back on. Within the terminal program you should see various messages as the control unit performs various start up tasks.

5. Close the terminal program session.

6. Manager can now be used to alter and then upload an old configuration file or receive and edit the control unit's now defaulted configuration.

7.15.3 Defaulting Security Settings

Procedure: Defaulting Security Settings

This process defaults the IP Office's security settings but does not alter its configuration settings.

1. Attach the serial cable between the PC and the DTE port on the IP Office control unit.
2. Start the terminal program on your PC. Ensure that it has been setup as listed in DTE Port Settings 155. Within a HyperTerminal session, the current settings are summarized across the base of the screen.
3. Enter **AT** (note upper case). The control unit should respond ***OK***.
4. Enter **AT-SECURITYRESETALL**.
5. You will be prompted to confirm the control unit's MAC address before continuing. Enter the address.
6. The control unit will respond ***OK*** when the action has been completed.
7. Close the terminal program session.
8. Manager can now be used to receive and edit the control unit's now defaulted security settings.

Defaulting the Configuration and Security Settings via the Boot Loader

This process defaults the IP Office security settings and its configurations settings.

1. Ensure that you have a backup copy of the IP Office's configuration before performing this action. If a copy of the configuration cannot be downloaded using Manager, check the Manager application directory for previously downloaded configurations.
   a. Use Manager to download an up to date copy of the configuration. If that is not possible, check in the Manager application folder for a previous copy of the configuration.
   b. Using IP Office Manager, select **File | Open Configuration**.
   c. Using the **Select IP Office Menu**, locate and select the IP Office system. Click **OK**.
   d. Enter the name and password for a service user account on that IP Office. Click **OK**. Manager will receive and display the configuration from the IP Office.
      - If not already done, this action creates a BOOTP entry in Manager for the IP Office system.
      - This action also confirms communication between the Manager PC and the IP Office prior to any following process.
   e. Select **File | Save Configuration As...** and save a copy of the configuration file onto the PC.
2. Attach the serial cable between the PC and the DTE port on the IP Office control unit.
   a. Start the terminal program on your PC. Ensure that it has been setup as listed in DTE Port Settings 155. Within a HyperTerminal session, the current settings are summarized across the base of the screen.
   b. Arrange the program windows so that the Terminal program and Manager TFTP Log are visible at the same time.
   c. Switch off power to the IP Office control unit.
   d. Power on the control unit and press the escape key every second until you get a Loader message. Below is an example.

      ```
      P12 Loader 2.4
      CPU Revision 0x0900
      ```

   e. Enter **AT** (note upper case). The control unit should respond ***OK***.
   f. If an OK response is not received, check the settings of your terminal program and repeat the process above.
3. To erase the current configuration in RAM memory enter **AT-X3**. A typical response is ***Sector Erases (Config)*** followed by a series of ***OK*** responses.
4. To erase the backup configuration stored in non-volatile memory enter **AT-X2**. A typical response if ***Sector 2 Erase (NV Config)*** followed by ***OK***. IP Office 403 only: If running an IP Office 403 control unit, also enter **AT-X4**.
5. Switch power to the control unit off and then back on. Within the terminal program you should see various messages as the control unit performs various start up tasks.
6. Close the terminal program session.
7. Manager can now be used to alter and then upload an old configuration file or receive and edit the control unit's now defaulted configuration.

7.15.4 Erasing the Operational Firmware

When the firmware loaded by the control unit is erased, the control unit will begin making BOOTP requests for a replacement firmware file. Manager can act as a BOOTP server and respond to the control units request with the appropriate file from those installed with Manager.

Unlike other control units, when the firmware loaded by an IP500 V2 control unit is erased, the IP500 V2 control unit will first look for replacement firmware on its SD cards before falling back to using a BOOTP request to Manager.

The processes below should be performed from a PC with a fixed IP address, directly connected to the IP Office control unit and with the IP Office system disconnected from any network. During the process, the control unit's IP address may default to a value in the 192.168.42.1 to 192.168.42.10 range. If this occurs, it may be necessary to amend the BOOTP entry in IP Office Manager to match the address the system is using.

- ⚠ Do not perform any of the following processes unless absolutely necessary. The IP Office software can normally be upgraded using IP Office Manager 136.
- ⚠ This process erases the operational software. Before attempting this process you must know the MAC and IP addresses of the system, plus have a backup copy of its configuration and the correct .bin file for the control unit type and level of software.
- ⚠ The presence of any firewall blocking TFTP and or BOOTP will cause this process to fail.

Erasing the Core Software via Debug

1. Run Manager.
   - In the **BOOTP** entries, check that there is an entry that matches the MAC Address, IP Address and .bin file used by the system. An entry is normally automatically created when a configuration has been loaded from that IP Office. .
     - If an entry is not present, create a new entry manually. The first two details can be found in the Control Unit settings in the configuration file. Then close and restart Manager.
   - Under **File | Preferences** ensure that Manager is set to 255.255.255.255. Also check that **Enable BootP Server** is checked.
   - Select **View | TFTPLog**.
   - Check that the required .bin file is present in Manager's working directory.
2. Attach the serial cable between the PC and the DTE port on the IP Office control unit.
   a. Start the terminal program on your PC. Ensure that it has been setup as listed in DTE Port Settings 155. Within a HyperTerminal session, the current settings are summarized across the base of the screen.
   b. Enter **AT** (note upper case). The control unit should respond ***OK***.
   c. Enter **AT-DEBUG**. The control unit should response with the time and date and then ***Hello>*** to show it is ready to accept commands.
3. To erase the current configuration in RAM memory enter **upgrade**.
4. The IP Office will erase its current software and then send out a BootP request on the network for new software. Manager will respond and start transferring the software using TFTP.

Erasing the Core Software via the Boot Loader

2. Run Manager.
   - In the **BOOTP** entries, check that there is an entry that matches the MAC Address, IP Address and .bin file used by the system. An entry is normally automatically created when a configuration has been loaded from that IP Office. .
     - If an entry is not present, create a new entry manually. The first two details can be found in the Control Unit settings in the configuration file. Then close and restart Manager.
   - Under **File | Preferences** ensure that Manager is set to 255.255.255.255. Also check that **Enable BootP Server** is checked.
   - Select **View | TFTPLog**.
   - Check that the required .bin file is present in Manager's working directory.
2. Attach the serial cable between the PC and the DTE port on the IP Office control unit.
   a. Start the terminal program on your PC. Ensure that it has been setup as listed in DTE Port Settings 155. Within a HyperTerminal session, the current settings are summarized across the base of the screen.
   b. Arrange the program windows so that the Terminal program and Manager TFTP Log are visible at the same time.
   c. Switch off power to the IP Office control unit.
   d. Power on the control unit and press the escape key every second until you get a Loader message. Below is an example.

```
P12 Loader 2.4
CPU Revision 0x0900
```

   e. Enter **AT** (note upper case). The control unit should respond ***OK***.
   f. If an OK response is not received, check the settings of your terminal program and repeat the process above.
3. Enter **AT-X**. The control unit should respond **Multi-Sector Erase**.
4. The control unit will now request the .bin file it requires. For IP500 V2 control units this will be from files on the System SD card. For other control units it will be from Manager and appears in the TFTP Log.
5. If the file transfers does not appear to be taking place, check that the IP address shown in the TFTP Log matches the BOOTP entry. Adjust the BOOTP entry if necessary.
6. When completed the system will reboot.

Chapter 8.
SD Card Management

8. SD Card Management

This chapter is currently set for standard mode only as it covers the thick clients.

The IP500 V2 control unit has two SD card slots, labeled **System SD** and **Optional SD** respectively. These are used as follows:

- **System SD Card**
  An Avaya System SD card must be present in this slot at all times. This card holds copies of the IP Office firmware and configuration and is used as the IP500 V2 control units non-volatile memory.
  - Each Avaya System SD card has a unique Feature Key serial number which is used for generating and validating licenses entered into the IP Office configuration.
  - The card stores the prompts for Embedded Voicemail operation and acts as the message store for Embedded Voicemail messages.
  - Prior to any planned shutdown or restart of the IP Office system, the current configuration running in the IP Office system's RAM memory is copied to the **/primary** folder on the System SD card and to the systems non-volatile memory.
  - Following a restart, the software in the **/primary** folder is loaded by the IP500 V2 control unit. If the required software is not present or valid a sequence of fallback options is used, see Booting from the SD Cards 165 for full details.
  - Following a restart, if present, the configuration file in the **/primary** folder is loaded by the IP500 V2 control unit. If no file is present the system will check for a file in its internal non-volatile memory. If no copy is found it will generate a default configuration file. See Booting from the SD Cards 165 for full details.
  - Once each day (approximately between 00:00 and 00:30) the IP Office will copy the current configuration running in its RAM memory to the **/primary** folder on the card.
  - Configuration changes made using IP Office Manager are first written to the copy of the configuration file on the card and then merged with the configuration running in the IP Office system's RAM memory.
  - The write lock setting on cards in the System SD card slot is ignored.
- **Optional SD Card**
  A card does not have to be present in this slot for normal IP Office operation. The slot can be used for various maintenance actions.
  - A card with an updated IP Office software or configuration can be inserted and those files then transferred to the System SD card in order to upgrade the IP Office system.
  - The full contents of the System SD card can be copied to the Optional SD card while the IP Office system is running.
  - The write lock setting on cards in the Optional SD card slot is honored.

Card Removal	Memory cards should always be shutdown 178 before being removed when the system is running. Though the card slot LEDs indicate when data is being written to an card, lack of flashing LED is not a sufficient safeguard. Shutting down the card will disable Embedded Voicemail if being used. If the **System SD** card is removed, features licensed by the card's Feature Key serial number will continue operating for up to 2 hours.

Card Maintenance Actions

Using IP Office Manager, IP Office System Status Application or a phone configured as a System Phone, a number of actions can be performed on the SD cards.

Action	Description	Manager	System Status	System Phone	Minutes
Shutdown/ Restart 178	Memory cards should always be shutdown 178 before being removed when the system is running. Though the card slot LEDs indicate when data is being written to an card, lack of flashing LED is not a sufficient safeguard. Shutting down the card will disable Embedded Voicemail if being used. If the **System SD** card is removed, features licensed by the card's Feature Key serial number will continue operating for up to 2 hours.	✓	✓	✓	–
Backup 170	Copy the files in the **/primary** folder on the System SD card to the **/backup** folder on the card.	✓	✓	✓	6
Restore 171	Copy the files in the **/backup** folder on the System SD card to the **/primary** folder on the card and restart the IP Office system.	✓	✓	✓	6
Copy 172	Copy all the files on the System SD card to the Optional SD card.	✓	✓	✓	90
Upgrade Binaries 175	Copy software files in the **/primary** folder on the Optional SD card to the **/primary** folder on the System SD card and then restart the IP Office system.	✓	–	✓	5
Upgrade Configuration 175	Copy the configuration file in the **/primary** folder on the Optional SD card to the **/primary** folder on the System SD card and then restart the IP Office system.	✓	–	–	5 seconds
Upload System Files 175	Upload a set of IP Office software and Embedded Voicemail prompts to the System SD card.	✓	–	–	40
View Files 169	View the folders and files on the control unit memory cards.	✓	–	–	–
	The actions below can be performed on cards in a SD card reader on a PC running IP Office Manager.				
Format 167	Reformat a card for IP Office usage without removing the Feature Key serial number. • ⚠ This process will erase all existing files on the card.	✓	✓	–	1
Recreate 167	Create the folder structure on a memory card and copy a set of IP Office software files into those folders.	✓	–	–	15

•

Card Specification

Non-Avaya cards can be used in the **Optional SD** slot as long as they match or exceed the standard below:

- SDHC 4GB minimum Class 2+. Single partition FAT32 format.

SD Card Folders

The **System SD** card contains the following folders:

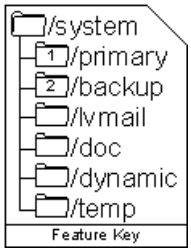

- **/primary**
  Contains the firmware files for the IP Office control unit, external expansion modules and supported phones. The folder can also contain music on hold files and license key files. This is the main set of files used by the IP Office system when booting up. Also contains the stored copy of the IP Office configuration.
- **/backup**
  Contains a copy of the primary folder at some previous point. A backup copy of the primary contents to this folder can be invoked manually (using Manager or SSA) or as part of the IP Office software upgrade using Manager.
- **/lvmail**
  Contains the system prompts used by Embedded Voicemail. Note that the mailbox messages and greetings are stored in a sub-folder of the **/dynamic** folder.
  - The sub-folder **/AAG** is used to store Embedded Voicemail auto-attendant greetings.
- **/doc**
  Contains initial installation documentation for the system.
- **/dynamic**
  Contains files used by the IP Office and retained through a reboot of the IP Office system.
  - The sub-folder **/lvmail** is used to store individual user and group mailbox messages, name recordings and announcements. The storage capacity for Embedded Voicemail is limited to 15 hours regardless of the capacity of the card.
- **/temp**
  Contains temporary files used by the IP Office and not retained through a reboot of the IP Office system.

The **Optional SD** card can contain a similar set of folders. These are used as an additional backup or they can be used as the source for upgrading the contents of the System SD card.

8.1 Booting from the SD Cards

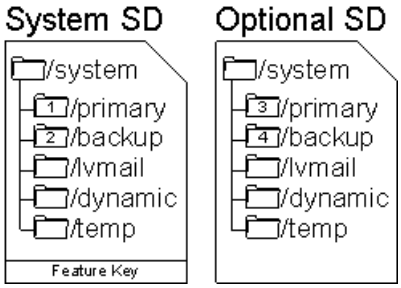

When being powered up, the IP500 V2 control unit looks for a valid ip500v2.bin binary file to load. It does this using the possible source below in the order shown, skipping to the next source if the file is not present or is not valid.

1. System SD card ***/primary*** folder.
2. The control unit's own internal non-volatile memory. Once a system has been installed, it uses its non-volatile memory to keep copies of the configuration and system binary files it is using. These can be used to restore operation during a system reboot. Note that though a system can boot from non-volatile memory, a System SD card must still be present for correct system operation.
3. System SD card ***/backup*** folder.
4. Optional SD card ***/primary*** folder.
5. Optional SD card ***/backup*** folder.
6. If no file is found, the control unit will fallback to making BOOTP requests to the network. IP Office Manager can respond the BOOTP request. See Erasing the Operational Firmware 159.

Once a valid ip500v2.bin file is found, the IP Office control unit will load that firmware. The source from which the control unit binary file was loaded is then used to load further files.

Configuration File Loading

Having installed the necessary system firmware files as above, the IP500 V2 control unit requires a configuration file:

- If the IP500 V2 booted using binary files from an SD card location, it looks for a valid configuration file in the same location.
  - If a configuration file is present and valid, it is loaded.
  - If a configuration file is present but is not valid, load the configuration copy in its non-volatile memory if present, else it assumes a default configuration.
  - If a configuration file is not present, use the non-volatile memory copy as above unless the reboot is as a result of a default system command.
- If the IP500 V2 booted using binary files from its non-volatile memory, it will also load the configuration copy from that location.
  - It will indicate a boot alarm (see below).
  - It will attempt to restore the firmware file in the System SD card's **/primary** folder using the copy in its non-volatile memory.
  - The normal boot up process of upgrading expansion module firmware does not occur. If the **File | Advanced | Upgrade** command is used, only external expansion modules actually present in the system are listed for upgrade.

Post Boot Operation

During normal operation, configuration and binary files sent to the System SD card **/primary** folder using IP Office Manager are also written to the non-volatile memory.

If the system has booted from its non-volatile memory due to an SD card problem, it is still possible to upgrade the ip500v2.bin file using the IP Office upgrade wizard.

Boot Alarms

The following apply if the IP500 V2 boots using software other than that in its System SD **/primary** folder:

- An alarm will be shown in the System Status Application. It will also generate an alarm if the card in any slot is not compatible. These alarms are also output as SNMP, Syslog or email alarms.
- The IP Office Manager **Select IP Office** menu will display an ⚠ icon indicating that the IP Office system is running using software other than from the System SD card's primary folder.
- The configuration can be read but will be read only. Attempting to send a configuration to the system will cause the error message ***Failed to save configuration data. (Internal error)***.

Bypassing the System SD Card Primary Folder

The control unit can be forced to bypass the System SD card's ***/primary*** folder and non-volatile memory when starting. This is done by pressing the **Aux** button while applying power to the control unit.

This action may be necessary if, following an upgrade of the IP Office system, it is determined that a roll back to the previously backed up firmware and configuration is required. Using the **Aux** button should restore system operation using the ***/backup*** folder files while the installer then restores the contents of the ***/primary*** folder to a previous release.

8.2 Creating an IP Office SD Card

The processes below can be applied to Avaya IP Office SD cards. They can also be applied to non-Avaya SD cards for use in a system's Optional SD card slot.

The card must be the following format. For the System SD slot, only Avaya SD cards with a Feature Key should be used.

- SDHC 4GB minimum Class 2+. Single partition FAT32 format.
- ⚠ **WARNING**
  Avaya supplied SD cards should not be formatted using any other method than the format commands within IP Office Manager and IP Office System Status Application. Formatting the cards using any other method will remove the feature key used for IP Office licensing from the card.

Creating a Card on a Local PC

These processes can be run on an SD card inserted in a card reader on the IP Office Manager PC. That card can then be used in the System SD card slot of a new system or in the Optional SD card slot of an existing system to upgrade that system 139.

Formatting an SD Card

Avaya SD cards should only be formatted using the format options provided within IP Office applications. This process is not normally necessary with Avaya SD cards unless you suspect that the card has been incorrectly formatted elsewhere.

- ⚠ **WARNING: All File Will Be Erased**
  Note that this action will erase any existing files and folders on the card. Once a card has been formatted, the folders and files required for IP Office operation can be loaded onto the card from the Manager PC using the Recreate IP Office SD Card command.

1. Insert the SD card into a reader slot on the Manager computer.
2. Using IP Office Manager, select **File | Advanced | Format IP Office SD Card**.
3. Select **IP Office A-Law**, **IP Office U-Law**, **IP Office Partner Edition** or **IP Office Norstar Edition**. This selection just sets the card label shown when viewing the card details. It does not affect the actual formatting. Select the label that matches the files set you will be placing on the card.
4. Browse to the card location and click **OK**.
5. The status bar at the bottom of Manager will display the progress of the formatting process.
6. When the formatting is complete, you can use the **Recreate IP Office SD Card** command to load the IP Office folders and files onto the card from the Manager PC.

Recreating an IP Office SD Card

This command can be used with a read-writeable SD card on the Manager PC. It copies the files and folders used by an IP500 V2 system when starting. It updates the card with the version of those files installed with the IP Office Manager application. It includes the binary files for the IP500 V2 system, external expansion modules and phones. It also includes the prompt files for Embedded Voicemail operation.

This process replaces existing files and adds new files. It does not delete files, so for example, any existing Embedded Voicemail messages and greetings are retained. If the card contains dynamic system files such as SMDR records, they are temporarily backed up by Manager and then restored after the card is recreated.

For the card to be used in an IP500 V2 system's **System SD** slot the card must be Avaya SD Feature Key card. The card must be correctly formatted, however a reformat of an existing working card is not necessary before using recreate to update the card contents.

- The source for the files copied to the SD card are the sub-folders of the ***\Memory Cards*** folder under Manager's **Working Directory** (normally ***C:\Program Files Avaya\IP Office\Manager***). However, if the Working Directory is changed to a location without an appropriate set of ***\Memory Cards*** sub-folders, the required set of files will not be copied onto the SD card.

Upgrading a System SD Card

1. Once started do not interrupt this process, for example by removing the SD card. This process takes approximately 15 minutes.
2. Insert the SD card into a card reader on the Manager PC.
3. Using IP Office Manager, select **File | Advanced | Recreate IP Office SD Card**.
4. Select **IP Office A-Law**, **IP Office U-Law**, **IP Office Partner Edition**. or **IP Office Norstar Edition**. This selection will affect how the IP Office systems operates when defaulted with this card present in its **System SD** card slot.
5. Browse to the card location and click **OK**.
6. IP Office Manager will prompt whether you want to include Avaya IP Office Web Manager files as part of the recreate process. Those files are necessary if you want to run IP Office Web Manager to manage the IP Office system into which the card will be loaded or if you want to use on-boarding 122.
7. Manager will start creating folders on the SD card and copying the required files into those folders. This process will take approximately 15 minutes.
8. Do not remove the SD card during the process. Wait until the Manager displays a message.

8.3 Viewing the Card Contents

Using IP Office Manager you can view the folders and files on the System SD card and the Optional SD card. You can then use various commands to upload and download files to and from the cards.

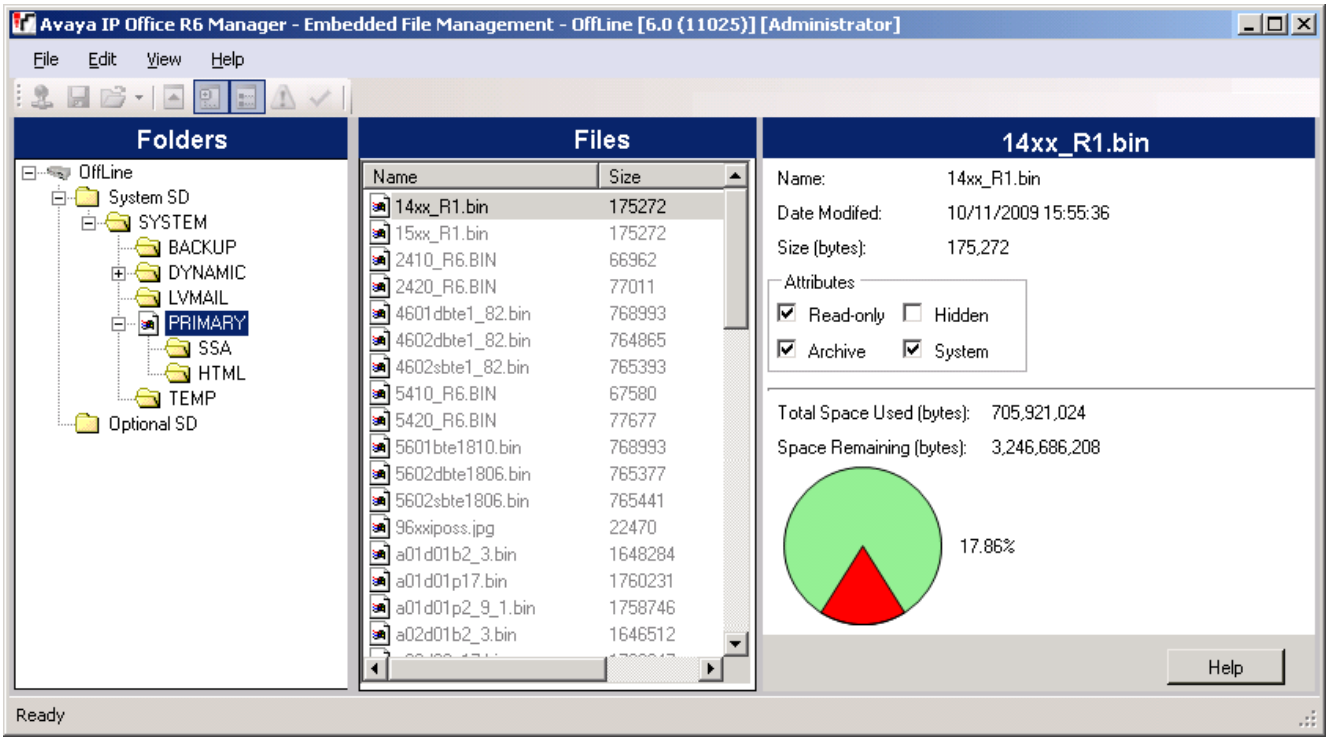

1. Using IP Office Manager, select **File | Embedded File Management**.
2. Using the **Select IP Office** menu, select the IP Office system.
3. The file contents of the memory cards are displayed.

8.4 Backing Up the System SD Card

There are two levels of backup that can be performed.

- **Backup the System SD Card Primary Folder** 170
  The contents of the primary folder on the card can be copied to the backup folder. They files can then be restored if necessary. Both actions can be performed remotely.
- **Backup the Whole System SD Card** 172
  The contents of the whole System SD card can be copied to the Optional SD card. While this can be done remotely, the contents can only be copied back manually using a card reader.

The backup, restore and copy operations will not be performed if the destination card has insufficient space for the files being copied.

8.4.1 Backing Up the Primary Folder

This process copies the contents of the **/primary** folder on the System SD card over the **/backup** folder. Any files with matching file names will be replaced.

This takes approximately 6 minutes.

Using IP Office Manager

1. Using IP Office Manager, select **File | Embedded File Management**.
2. Using the **Select IP Office** menu, select the IP Office system.
3. The file contents of the memory cards are displayed.
4. Select **File | Backup System Files**.
   - The contents of the **/primary** folder on the System SD card will be copied to the **/backup** folder. This process takes approximately 6 minutes.

Using the System Status Application

1. Start System Status 73 and access the IP Office's status output.
2. In the navigation panel select **System**.
3. At the bottom of the screen select **Backup System Files**.
   - The contents of the **/primary** folder on the System SD card will be copied to the **/backup** folder. This process takes approximately 6 minutes.

Using a System Phone

This process can be used by a user configured as a System Phone user and using a 1400, 1600, 2400, 4600, 5400, 5600 or 9600 Series phone (excluding XX01, XX02 and XX03 models). The user's **Login Code** is used to restrict access to system administration functions on the phone.

1. Select **Features | Phone User | System Admin**.
2. Enter your IP Office user login code.
3. From the menu select **Memory Card**.
4. Select **System Backup**.
   - The contents of the **/primary** folder on the System SD card will be copied to the **/backup** folder. This process takes approximately 6 minutes.

8.4.2 Restore from the Backup Folder

The contents of the **/backup** folder on the System SD card can be copied to the **/primary** folder. Any files with matching file names will be replaced. The IP Office is then restarted using the files now in the **/primary** folder.

- **! WARNING**
  This process will require the IP Office system to reboot in order to complete the process. Any current calls and services will be ended by the reboot.

Using IP Office Manager

1. Using IP Office Manager, select **File | Embedded File Management**.
2. Using the **Select IP Office** menu, select the IP Office system.
3. The file contents of the memory cards are displayed.
4. Select **File | Restore System Files**.
   - The contents of the **/backup** folder on the System SD card will be copied to the **/primary** folder. The process takes approximately 6 minutes.
   - When the process has been completed, the IP Office system will be restarted.

Using the System Status Application

1. Start System Status 73 and access the IP Office's status output.
2. In the navigation panel select **System**.
3. At the bottom of the screen select **Restore System Files**.
   - The contents of the **/backup** folder on the System SD card will be copied to the **/primary** folder. The process takes approximately 6 minutes.
   - When the process has been completed, the IP Office system will be restarted.

Using a System Phone

This process can be used by a user configured as a System Phone user and using a 1400, 1600, 2400, 4600, 5400, 5600 or 9600 Series phone (excluding XX01, XX02 and XX03 models). The user's **Login Code** is used to restrict access to system administration functions on the phone.

1. Select **Features | Phone User | System Admin**.
2. Enter your IP Office user login code.
3. From the menu select **Memory Card**.
4. Select **System Restore**.
   - The contents of the **/backup** folder on the System SD card will be copied to the **/primary** folder. The process takes approximately 6 minutes.
   - When the process has been completed, the IP Office system will be restarted.

8.4.3 Backing Up to the Optional Card

This process copies all files on the System SD card to the Optional SD card. It includes the **/primary** and **/backup** folders and the Embedded Voicemail files including message files. Any matching files and folders on the Optional SD card are overwritten.

The process is a simple copy. Any files already copied that change while the process are not recopied. Any new files added (for example voicemail messages) while the process is running may not be copied.

This process takes at least 90 minutes and may take much longer depending on the amount of data to be copied, for example it will be longer if Embedded Voicemail is being used by the IP Office system to take messages.

Using IP Office Manager

1. Using IP Office Manager, select **File | Embedded File Management**.
2. Using the **Select IP Office** menu, select the IP Office system.
3. The file contents of the memory cards are displayed.
4. Select **File | Copy System Card**.
   - The contents of the System SD card will be copied to the Optional SD card. This process at least 90 minutes and can take much longer.

Using the System Status Application

1. Start System Status 73 and access the IP Office's status output.
2. In the navigation panel select **System**.
3. Select **Memory Cards**.
4. Select **System Card**.
5. At the bottom of the screen select **Copy System Card**.
   - The contents of the System SD card will be copied to the Optional SD card. This process at least 90 minutes and can take much longer.

Using a System Phone

This process can be used by a user configured as a System Phone user and using a 1400, 1600, 2400, 4600, 5400, 5600 or 9600 Series phone (excluding XX01, XX02 and XX03 models). The user's **Login Code** is used to restrict access to system administration functions on the phone.

1. Select **Features | Phone User | System Admin**.
2. Enter your IP Office user login code.
3. From the menu select **Memory Card**.
4. Select **Copy**.
   - The contents of the System SD card will be copied to the Optional SD card. This process at least 90 minutes and can take much longer.

8.4.4 Restoring from the Optional Card

The files in the **/primary** folder on the Optional SD card can be copied to the **/primary** folder on the System SD card. Any files with matching file names will be replaced. The IP Office is then restarted using the files now in the System SD card's **/primary** folder.

The restore process is separated into two parts, either copying configuration files from the Optional SD card or copying software files from the Optional SD card. This allows software files to be copied from an Optional SD card without affecting the existing configuration of that system.

- **! WARNING**
  This process will require the IP Office system to reboot in order to complete the process. Any current calls and services will be ended by the reboot.

8.4.4.1 Restoring a Configuration from an Optional Card

The following processes copy the configuration file (***config.cfg***) and licenses file (***keys.txt***). The processes take a few seconds.

- **! WARNING**
  This process will require the IP Office system to reboot in order to complete the process. Any current calls and services will be ended by the reboot.

Copying a Configuration from the Optional SD Card File Using IP Office Manager

1. Using IP Office Manager, select **File | Embedded File Management**.
2. Using the **Select IP Office** menu, select the IP Office system.
3. The file contents of the memory cards are displayed.
4. Select **File | Upgrade Configuration**.
   - The configuration file (***config.cfg***) and licenses file (***keys.txt***) in the ***/primary*** folder on the Optional SD card are copied to the ***/primary*** folder on the System SD card. This process takes approximately a few seconds.
   - When the process has been completed, the IP Office system will be restarted.

Copying a Configuration File from the Optional SD Card Using a System Phone

This process can be used by a user configured as a System Phone user and using a 1400, 1600, 2400, 4600, 5400, 5600 or 9600 Series phone (excluding XX01, XX02 and XX03 models). The user's **Login Code** is used to restrict access to system administration functions on the phone.

1. Select **Features | Phone User | System Admin**.
2. Enter your IP Office user login code.
3. From the menu select **Memory Card**.
4. Select **Upgrade Config...**.
   - The configuration file (***config.cfg***) and licenses file (***keys.txt***) in the ***/primary*** folder on the Optional SD card are copied to the ***/primary*** folder on the System SD card. This process takes approximately a few seconds.
   - When the process has been completed, the IP Office system will be restarted.

8.4.4.2 Restoring Software from an Optional SD Card

These processes copy all files in the folder except the configuration file (***config.cfg***) and licenses file (***keys.txt***). The processes take approximately 5 minutes. These process do not restore Embedded Voicemail prompts (see Upgrading Card Software 175).

- **! IP Office Technical Bulletins**
  Ensure that you have obtained and read the IP Office Technical Bulletin relating to the IP Office software release which you are installing. This bulletin will contain important information that may not have been included in this manual. IP Office Technical Bulletins are available from the Avaya support website *(http://support.avaya.com)*.

- **! Upgrade Licenses**
  Some upgrades may require entry of upgrade licenses. It is still possible to upgrade the system without the necessary licenses, however the system will not provide any telephony functions after the upgrade until the appropriate license is added to the system configuration.

- **! WARNING**
  This process will require the IP Office system to reboot in order to complete the process. Any current calls and services will be ended by the reboot.

Copying Software Files from the Optional SD Card Using IP Office Manager

1. Using IP Office Manager, select **File | Embedded File Management**.
2. Using the **Select IP Office** menu, select the IP Office system.
3. The file contents of the memory cards are displayed.
4. Select **File | Upgrade Binaries**.
   - The software files (all files in the folder except the configuration file (***config.cfg***) and licenses file (***keys.txt***)) in the ***/primary*** folder on the Optional SD card are copied to the ***/primary*** folder on the System SD card. This process takes approximately 5 minutes.
   - When the process has been completed, the IP Office system will be restarted.

Copying Software Files from the Optional SD Card Using a System Phone

This process can be used by a user configured as a System Phone user and using a 1400, 1600, 2400, 4600, 5400, 5600 or 9600 Series phone (excluding XX01, XX02 and XX03 models). The user's **Login Code** is used to restrict access to system administration functions on the phone.

1. Select **Features | Phone User | System Admin**.
2. Enter your IP Office user login code.
3. From the menu select **Memory Card**.
4. Select **Upgrade Binaries...**.
   - The software files (all files in the folder except the configuration file (***config.cfg***) and licenses file (***keys.txt***)) in the ***/primary*** folder on the Optional SD card are copied to the ***/primary*** folder on the System SD card. This process takes approximately 5 minutes.
   - When the process has been completed, the IP Office system will be restarted.

8.5 Upgrading Card Software

In addition to using the traditional IP Office Upgrade Wizard 137, IP500 V2 control units can be upgraded by loading the required set of firmware files onto the System SD card and rebooting the system.

- **! IP Office Technical Bulletins**
  Ensure that you have obtained and read the IP Office Technical Bulletin relating to the IP Office software release which you are installing. This bulletin will contain important information that may not have been included in this manual. IP Office Technical Bulletins are available from the Avaya support website *(http://support.avaya.com)*.

- **! Upgrade Licenses**
  Some upgrades may require entry of upgrade licenses. It is still possible to upgrade the system without the necessary licenses, however the system will not provide any telephony functions after the upgrade until the appropriate license is added to the system configuration.

- **! WARNING**
  This process will require the IP Office system to reboot in order to complete the process. Any current calls and services will be ended by the reboot.

There are a number of ways in which this can be done.

Method	Description	Location	Software Files	Embedded Voicemail Prompts
Using Manager 176	Using IP Office Manager, the contents of the card are compared to the files that Manager has available and are upgraded if necessary.	**Local or Remote**	✓	✓
System SD Card Upgrade 176	In this method, the System SD card is shut down and removed from the control unit. The card's contents are upgraded using IP Office Manager.	**Local**	✓	✓
Upgrade from Optional SD Card 177	This method uses an SD card loaded with the required version of IP Office software. The card is inserted into the control unit's Option SD card slot and its contents copied to the System SD card.	**Local**	✓	–

8.5.1 Upgrading Remotely Using Manager

This process will copy all system files not present on the System SD card and those files which have a different version to those already present on the card. That includes IP Office software files and Embedded Voicemail prompt files.

1. Using IP Office Manager, select **File | Embedded File Management**.
2. Using the **Select IP Office** menu, select the IP Office system.
3. The file contents of the memory cards are displayed.
4. Select **File | Backup System Files**. The contents of the **/primary** folder on the System SD card will be copied to the **/backup** folder. This process takes approximately 6 minutes.
5. Select **File | Upload System Files**. The system files that Manager has will be uploaded to the **/primary** folder on the System SD card. This includes IP Office software files and Embedded Voicemail prompt files. Depending on the files that need to be updated, this process can take up to 40 minutes.

8.5.2 Upgrading the SD Card Locally

The following process can be used if you have physical access to the IP500 V2 control unit. This method be used with a timed reboot, allowing the card upgrade to be done during normal operation hours followed by a reboot outside of normal operation hours.

If the card is being used for Embedded Voicemail, that service is not available while the card is shutdown. Licensed features however will continue running for up to 2 hours while the card is shutdown.

1. Shutdown the System SD memory card 178 and remove it from the control unit.
2. Follow the process for recreating the SD card 167. This process will overwrite the software files on the card with the files available to IP Office Manager. It will not affect any other files, for example the configuration file and Embedded Voicemail mesages. This process takes approximately 15 minutes.
3. When the recreate process has completed, reinsert the card into the control unit's System SD card slot.
4. Using IP Office Manager select **File | Advanced | Reboot**.
5. In the **Select IP Office** menu, select the IP500 V2 system and click **OK**.
6. Select the type of reboot that you want performed and click **OK**.
7. When the system is rebooted, as it restarts it will load the software files in the primary folder of the System SD card.

8.5.3 Upgrading Using an Optional SD Card

This method allows an Optional SD card to be used as the source from which the System SD card is upgraded. It only upgrades the software files, it does not update Embedded Voicemail prompts.

1. Once started do not interrupt this process, for example by removing the SD card. This process takes approximately 15 minutes.
2. Insert the SD card into a card reader on the Manager PC.
3. Using IP Office Manager, select **File | Advanced | Recreate IP Office SD Card**.
4. Select **IP Office A-Law**, **IP Office U-Law**, **IP Office Partner Edition**. or **IP Office Norstar Edition**. This selection will affect how the IP Office systems operates when defaulted with this card present in its **System SD** card slot.
5. Browse to the card location and click **OK**.
6. IP Office Manager will prompt whether you want to include Avaya IP Office Web Manager files as part of the recreate process. Those files are necessary if you want to run IP Office Web Manager to manage the IP Office system into which the card will be loaded or if you want to use on-boarding 122.
7. Manager will start creating folders on the SD card and copying the required files into those folders. This process will take approximately 15 minutes.
8. Do not remove the SD card during the process. Wait until the Manager displays a message.

7. Insert the card into the control unit's Optional SD card slot.
8. Use one of the processes below to copy the software from the Optional SD card to the System SD card. Each of those processes will cause the IP Office system to be restarted.

Copying Software Files from the Optional SD Card Using IP Office Manager

1. Using IP Office Manager, select **File | Embedded File Management**.
2. Using the **Select IP Office** menu, select the IP Office system.
3. The file contents of the memory cards are displayed.
4. Select **File | Upgrade Binaries**.
   - The software files (all files in the folder except the configuration file (***config.cfg***) and licenses file (***keys.txt***)) in the ***/primary*** folder on the Optional SD card are copied to the ***/primary*** folder on the System SD card. This process takes approximately 5 minutes.
   - When the process has been completed, the IP Office system will be restarted.

Copying Software Files from the Optional SD Card Using a System Phone

This process can be used by a user configured as a System Phone user and using a 1400, 1600, 2400, 4600, 5400, 5600 or 9600 Series phone (excluding XX01, XX02 and XX03 models). The user's **Login Code** is used to restrict access to system administration functions on the phone.

1. Select **Features | Phone User | System Admin**.
2. Enter your IP Office user login code.
3. From the menu select **Memory Card**.
4. Select **Upgrade Binaries...**.
   - The software files (all files in the folder except the configuration file (***config.cfg***) and licenses file (***keys.txt***)) in the ***/primary*** folder on the Optional SD card are copied to the ***/primary*** folder on the System SD card. This process takes approximately 5 minutes.
   - When the process has been completed, the IP Office system will be restarted.

8.6 Removing SD Cards

Card Removal	Memory cards should always be shutdown 178 before being removed when the system is running. Though the card slot LEDs indicate when data is being written to an card, lack of flashing LED is not a sufficient safeguard. Shutting down the card will disable Embedded Voicemail if being used. If the **System SD** card is removed, features licensed by the card's Feature Key serial number will continue operating for up to 2 hours.

The following processes can be used with SD cards installed in IP500 V2 control units and also with Compact Flash memory cards installed in IP406 V2 control units.

8.6.1 Card Shutdown

Card Removal	Memory cards should always be shutdown 178 before being removed when the system is running. Though the card slot LEDs indicate when data is being written to an card, lack of flashing LED is not a sufficient safeguard. Shutting down the card will disable Embedded Voicemail if being used. If the **System SD** card is removed, features licensed by the card's Feature Key serial number will continue operating for up to 2 hours.

Before a memory card is removed from an IP Office system that is running, the card must be shutdown. Removing a memory card while the system is running may cause file corruption.

Card services can be restarted by either reinserting the card or using a **Start Up** command.

Card Shutdown Using IP Office Manager

1. Using IP Office Manager, select **File | Advanced | Memory Card Commands | Shutdown**.
2. Using the **Select IP Office** menu, select the IP Office system containing the memory card.
3. Click **OK**.
   - At the back of the control unit, confirm that the appropriate memory card LED is off.
   - The card can now be removed in order to perform the necessary maintenance actions.

Card Shutdown Using the System Status Application Application

1. Start System Status 73 and access the IP Office's status output.
2. In the navigation panel select **System**.
3. Select **Memory Cards**.
4. Select either **System Card** or **Optional Card**.
5. At the bottom of the screen select **Shutdown**.
   - At the back of the control unit, confirm that the appropriate memory card LED is off.
   - The card can now be removed in order to perform the necessary maintenance actions.

Card Shutdown Using a System Phone

This process can be used by a user configured as a System Phone user and using a 1400, 1600, 2400, 4600, 5400, 5600 or 9600 Series phone (excluding XX01, XX02 and XX03 models). The user's **Login Code** is used to restrict access to system administration functions on the phone.

1. Select **Features | Phone User | System Admin**.
2. Enter your IP Office user login code.
3. From the menu select **Memory Card**.
4. Select **System** for the System SD card or **Option** for the Optional SD card.
5. Select **Shutdown**.
   - At the back of the control unit, confirm that the appropriate memory card LED is off.
   - The card can now be removed in order to perform the necessary maintenance actions.

8.6.2 Card Startup

Reinserting a memory card into a system that is already switched on will automatically restart card operation. However, if the card has been shutdown but not removed, it can be restarted using Manager without requiring a reboot.

Card Startup Using IP Office Manager

1. Using IP Office Manager, select **File | Advanced | Memory Card Commands | Startup**.
2. Using the **Select IP Office** menu, select the IP Office system containing the memory card.
3. Click **OK**.

Card Startup Using the System Status Application

1. Start System Status 73 and access the IP Office's status output.
2. In the navigation panel select **System**.
3. Select **Memory Cards**.
4. Select either **System Card** or **Optional Card**.
5. At the bottom of the screen select **Start Up**.

Card Startup Using a System Phone

This process can be used by a user configured as a System Phone user and using a 1400, 1600, 2400, 4600, 5400, 5600 or 9600 Series phone (excluding XX01, XX02 and XX03 models). The user's **Login Code** is used to restrict access to system administration functions on the phone.

1. Select **Features | Phone User | System Admin**.
2. Enter your IP Office user login code.
3. From the menu select **Memory Card**.
4. Select **System** for the System SD card or **Option** for the Optional SD card.
5. Select **Startup**.

8.6.3 System Shutdown

IP Office systems running IP Office Release 6.0 can be shut down in order to perform maintenance. The shut down can be either indefinite or for a set period of time after which the IP Office will automatically reboot.

During the shut down process, the current configuration in the control unit's RAM memory is copied to the control units non-volatile memory. For IP500 V2 systems that location is the System SD card.

For control units with memory cards the memory cards can be shutdown and restarted 178 separately from the system.

- **! WARNINGS**
  - A shutdown must always be used to switch off the system. Simply removing the power cord or switching off the power input may cause the loss of configuration data.
  - This is not a polite shutdown, any user calls and services in operation will be stopped. Once shutdown, the system cannot be used to make or receive any calls until restarted.
  - The shutdown process takes up to a minute to complete. When shutting down a system with a Unified Communications Module installed, the shutdown can take up to 3 minutes while the card safely closes all open files and closes down its operating system. During this period the module's LED 1 remains green.
  - When shutdown, the LEDs shown on the system are as follows. Do not remove power from the system or remove any of the memory cards until the system is in this state:
    - LED1 on each IP500 base card installed will also flash red rapidly plus LED 9 if a trunk daughter card is fitted to the base card.
    - The CPU LED on the rear of the system will flash red rapidly.
    - The System SD and Optional SD memory card LEDs on the rear of the system are extinguished.
  - To restart a system when shutdown indefinitely, or to restart a system before the timed restart, switch power to the system off and on again.

System Shutdown Using IP Office Manager

1. Using IP Office Manager, select **File | Advanced | System Shutdown**.
2. Using the **Select IP Office** menu, the **System Shutdown Mode** menu is displayed.

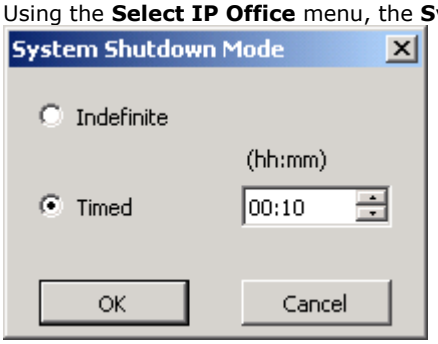

3. Select the type of shutdown required. If **Indefinite** is used, the system can only be restarted by having its power switched off and then on again. If a **Timed** shutdown is selected, the IP Office will reboot after the set time has elapsed.

System Shutdown Using the System Status Application

1. Start System Status 73 and access the IP Office's status output.
2. In the navigation panel select **System**.
3. At the bottom of the screen select **Shutdown System**.
4. Select the time duration for the shutdown or indefinite.

System Shutdown Using a System Phone

This process can be used by a user configured as a **System Phone** user and using a 1400, 1600, 2400, 4600, 5400, 5600, 9500 or 9600 Series phone (excluding XX01, XX02 and XX03 models). The user's **Login Code** is used to restrict access to system administration functions on the phone.

Unlike Manager, a system phone user cannot select an indefinite shutdown. They can set a timed shut down of between 5 minutes and 24 hours.

1. Select **Features | Phone User | System Admin**.
2. Enter your IP Office user login code.
3. From the menu select **System Shutdown**.
4. Select a time period for the shutdown. It must be in between 5 minutes and 24 hours.
5. Press **Done** and then **Confirm** to begin the shutdown.

System Shutdown Using the IP500 V2 AUX Button

When the **AUX** button is pressed for more than 5 seconds, the IP500 V2 control unit will shutdown with the restart timer set to 10 minutes.

Chapter 9.
IP500 Basic Installation

9. IP500 Basic Installation

9.1 IP500 Tools Required

The following is a general summary of the tools required. Additional tools and equipment will be required for wall and or rack mounting and to fashion ground cable connections suitable to local requirements.

- **Tools Required**
  - ☐ 5mm Flat-blade screwdriver.
  - ☐ Crosshead screwdriver.
  - ☐ Anti-static wrist strap and ground point.
  - ☐ RJ45-RJ45 Ethernet LAN Cable.
  - ☐ M4 Cross-Head Screwdriver.
  - ☐ Tools suitable for crimping a cable spade.
  - ☐ If wall mounting, drills and tools for wall mounting fixtures.

- **Additional Parts Required**
  In addition to orderable IP Office equipment, the following items will be required.
  - ☐ 14AWG Solid copper wire for ground connection of control units and expansion modules.
  - ☐ Cable sleeve matching local regulator requirements for ground wires. Typically green for a functional ground and green/yellow for a protective ground.
  - ☐ If wall mounting, additional fixtures and fittings suitable for the wall type and mounting kit being used.
  - ☐ Cable ties and labels for tidying and identifying cables.

9.2 IP500 Read the Documentation

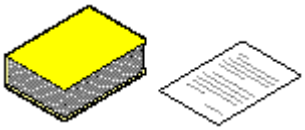

Ensure that you have read this manual in full before starting installation. Also include the installation documentation for any other equipment and applications being installed as part of the IP Office system.

- **! IP Office Technical Bulletins**
  Ensure that you have obtained and read the IP Office Technical Bulletin relating to the IP Office software release which you are installing. This bulletin will contain important information that may not have been included in this manual. IP Office Technical Bulletins are available from the Avaya support website *(http://support.avaya.com)*.
- **! Upgrade Licenses**
  Some upgrades may require entry of upgrade licenses. It is still possible to upgrade the system without the necessary licenses, however the system will not provide any telephony functions after the upgrade until the appropriate license is added to the system configuration.

- **1100/1200 Series Phone Installation.**
- **one-X Portal for IP Office Installation.**
- **Avaya H323 IP Phone Installation.**
- **Embedded Voicemail Installation.**
- **Voicemail Pro Installation.**
- **Contact Store Installation.**
- **Compact DECT Installation.**
- **IP DECT R4 Installation.**
- **3600 Series Wireless IP Installation.**
- **SoftConsole Installation Manual.**
- **SIP Extension Configuration.**

Information Web Sites

IP Office documentation is available from the following web sites.

- **Avaya Support** *(http://support.avaya.com)*
  Contains documentation and other support materials for Avaya products including IP Office. Copies of the IP Office CD images are available from this site and updated core software .bin files.
- **Avaya IP Office Knowledge Base** *(http://marketingtools.avaya.com/knowledgebase)*
  Access to an on-line regularly updated version of the IP Office Knowledge Base.

9.3 IP500 Unpacking

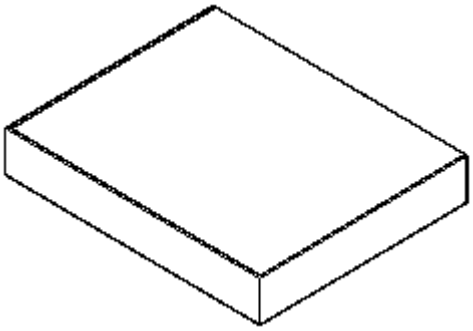

Use the following procedure when unpacking any equipment supplied by Avaya or an Avaya reseller or distributor.

Information Required

- ☐ **Equipment Checklist**.
  An installation checklist of the parts and equipment ordered for the installation.

Procedure

1. ☐ **Check for Packaging Damage**
   Before unpacking any equipment, check for any signs of damage that may have occurred during transit. If any damage exists bring it to the attention of the carrier.
2. ☐ **Check the Correct Parts Have Been Delivered**
   Check all cartons against the packing slip and ensure that you have the correct items. Report any errors or omissions to the equipment supplier.
3. ☐ **Retain All Packaging and Documentation**
   While unpacking the equipment, retain all the packaging material. Fault returns are accepted only if repackaged in the original packaging. If performing a staged installation, the original packaging will also assist when repacking equipment to be moved to the final install site.
4. ☐ **Ensure that Anti-Static Protection Measures are Observed**
   Ensure that anti-static protection measures are observed at all times when handling equipment with exposed electrical circuit boards.
5. ☐ **Check All Parts**
   Visually inspect each item and check that all the necessary documentation and accessory items have been included. Report any errors or omissions to the dealer who supplied the equipment.
6. ☐ **Check All Documentation**
   Ensure that you read and retain any documentation included with the equipment.

9.4 IP500 Card Installation

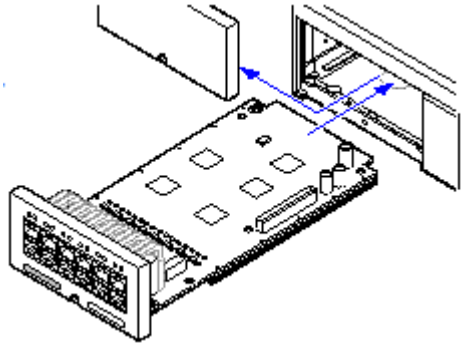

The IP500 base cards and trunk daughter cards should be fitted before power is applied to the control unit.

1. Fitting IP500 Trunk Daughter Cards to the Base Cards. 188
2. Fitting IP400 Legacy Cards to a Legacy Card Carrier. 189
3. Installing IP500 Cards into the Control Unit. 190

- **Warnings**
  - Correct anti-static protection steps should be taken before handling circuit boards.
  - Cards must never be added or removed from the control unit while it has power connected.

- **General Notes**
  - Cards can be fitted in any order into any available slots. The only exception is the IP500 4-Port Expansion card which can only be installed in right hand slot 4.
  - It is recommended that cards are fitted from left to right.
  - There are restrictions to the number of supported cards of some types. When such a limit is exceed, the right-most card of that type will not function.
  - Ensure that you use the labels supplied to identify the card fitted into the control unit.

9.4.1 IP500 Daughter Card Preparation

IP500 trunk daughter cards can be fitted to any IP500 base card except the IP500 Legacy Card Carrier. For IP500 Combination cards, the trunk daughter card is pre-installed and cannot be changed.

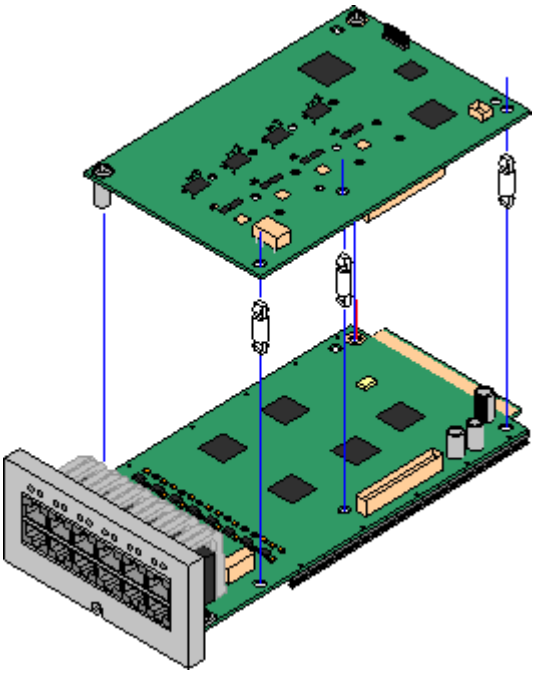

Warnings

1. Correct anti-static protection steps should be taken while handling circuit boards.

Parts and Equipment Required

1. ☐ **IP500 Base Card** (except the IP500 Legacy Card Carrier).
2. ☐ **IP500 Trunk Daughter Card**
3. ☐ **3 Stand Off Pillars**
   These are supplied with the trunk daughter card.

Tools Required.

1. ☐ 5mm Flat-blade screwdriver.
2. ☐ Anti-static wrist strap and ground point.

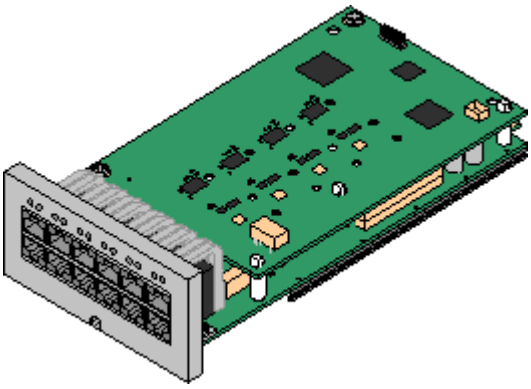

Procedure: Installing a Trunk Daughter Card

1. Check that correct cards have been supplied.
2. Ensure that you are wearing an anti-static wrist strap connected to a suitable ground point.
3. On the base card identify the position of 3 holes for the plastic pillars for the IP500 card. These are along the same edge as the card connector.
4. Fit the stand off pillars to the IP500 base card.
5. If there is a clip-on metal shield over the connector block on the base card, remove it.
6. Using minimal force and checking that the pins are correctly located, push the IP500 trunk card onto its connector block and the stand off pillars.
7. Check that the card connector has snapped into position.
8. Using the washers and screws provided, secure the metal stand off pillars to the base card.
9. A set of labels are supplied with the trunk daughter card. Fit the appropriate label to the front of the base card.

9.4.2 IP500 Legacy Card Preparation

An IP500 Legacy Carrier card can be used to fit IP400 trunk or VCM cards into an IP500 or IP500 V2 control unit. Up to 2 IP500 legacy carrier cards can be inserted.

- ✓ PRI T1
- ✓ Dual PRI T1
- ✓ PRI 30 E1 (1.4)
- ✓ Dual PRI E1
- ✓ PRI 30 E1R2 RJ45
- ✓ Dual PRI E1R2 RJ45
- ✓ BRI-8 (UNI)
- ✓ ANLG 4 Uni (US only)
- ✓ VCM 4
- ✓ VCM 8
- ✓ VCM 16
- ✓ VCM 24
- ✓ VCM 30

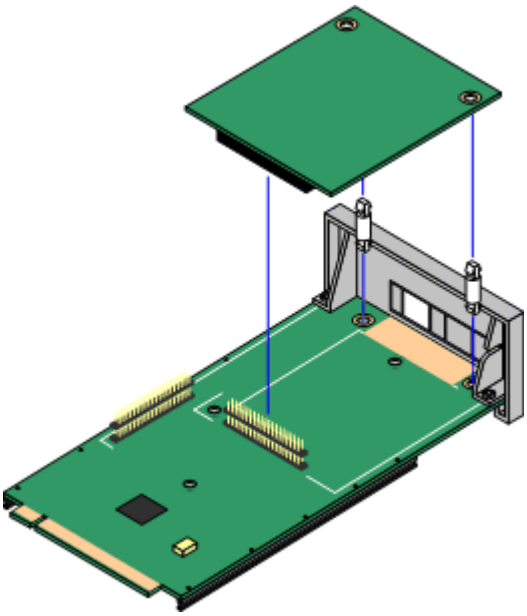

Warnings

1. Correct anti-static protection steps should be taken while handling circuit boards.

Parts and Equipment Required

1. ☐ **IP500 Carrier Card**
2. ☐ **IP400 Card**
   The table opposite lists supported cards. Any card not listed is not supported. Cards are supplied with 2 plastic stand off pillars. Trunk cards are also supplied with a replacement blanking plate which is not required.

Tools Required

1. ☐ 5mm Flat-blade screwdriver.
2. ☐ Anti-static wrist strap and ground point.

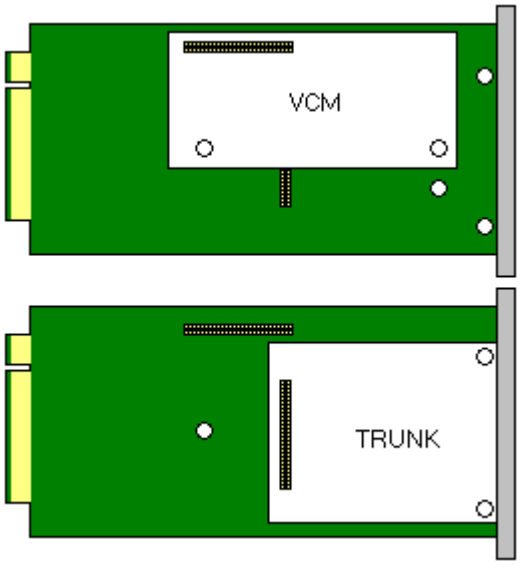

Procedure: Installing a Carrier Card

1. Check that correct cards have been supplied.
2. Ensure that you are wearing an anti-static wrist strap connected to a suitable ground point.
3. On the carrier card identify the position of the jumper block and stand off pillar holes for the IP400 card. The peg holes are labeled as VCM or TRUNK.
4. If fitting an IP400 trunk card, identify which of the plastic snap-off panels on the front of the carrier card need to be removed to allow the trunk cable connections. Carefully remove those panels.

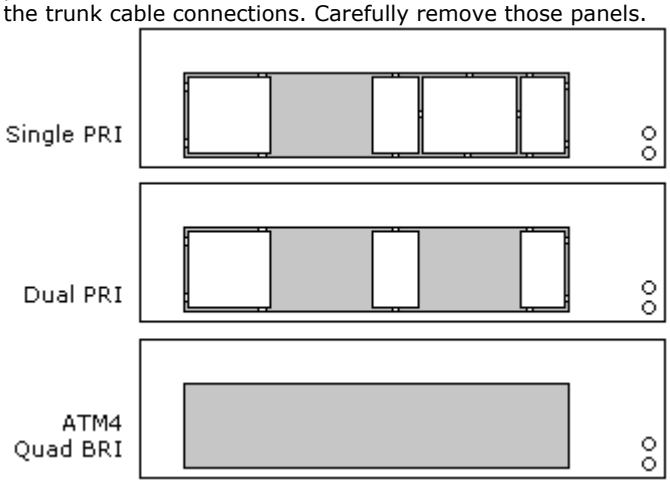

5. Fit the stand off pillars to the IP500 carrier card.
6. Using minimal force and checking that the pins are correctly located, push the IP400 card onto its jumper and the stand off pillars.

9.4.3 IP500 Card Insertion

Having prepared each IP500 base card by adding any trunk daughter card 188 or IP400 legacy card 189, the base card can be inserted into the control unit.

- **Warnings**
  - Correct anti-static protection steps should be taken while handling circuit boards.
  - Cards must never be added or removed from the control unit while it has power connected.

- **Tools Required**
  - ☐ 5mm Flat-blade screwdriver.
  - ☐ Anti-static wrist strap and ground point.

Installing an IP500 Card

1. Check that there is no power to the control unit.
2. Using a flat-bladed screwdriver, remove the cover from the slot on the front of the control unit that will be used for each card being installed. This cover is no longer required but should be retained until installation has been completed.

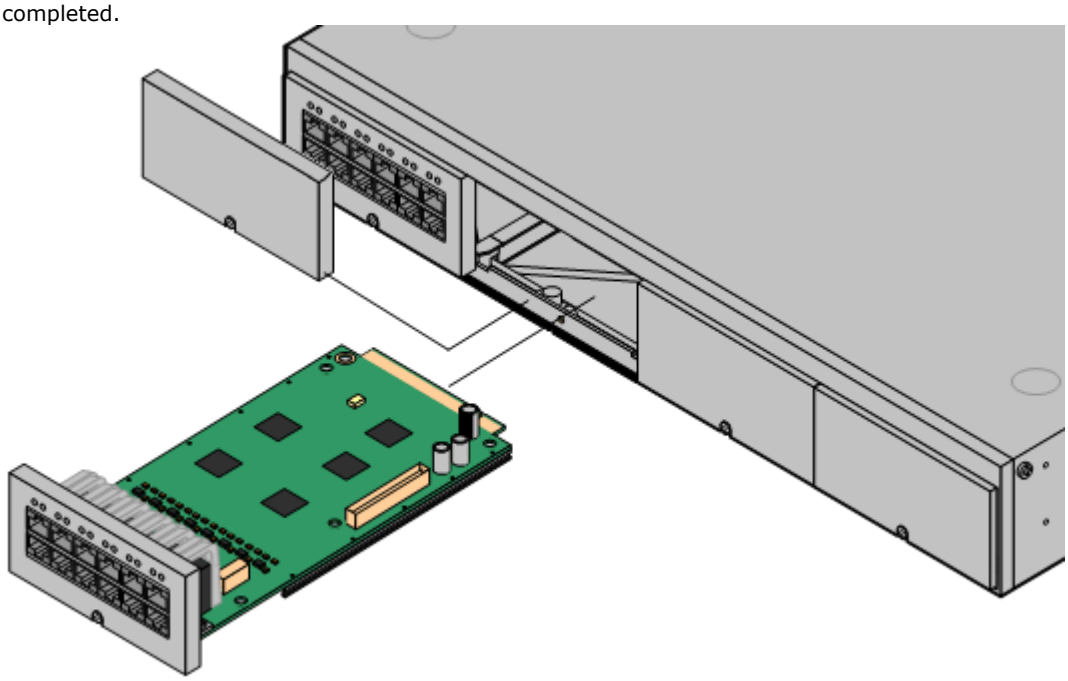

3. Allowing the card to rest against the bottom of the slot, begin sliding it into the control unit. When half inserted, check that the card rails have engaged with the slot edges by trying to gently rotate it. If the card rotates remove it and begin inserting it again.
4. The card should slide in freely until almost fully inserted. At this point apply pressure at the base of the front of the card to complete insertion.
5. Using a flat-bladed screwdriver secure the card.
6. Reapply power to the control unit. Initially each card should show a red LED (two if a daughter card is fitted) as the control unit restarts. After approximately 30 seconds these should change to flashing red as the card is started. These should then change to flashing every 5 seconds if the cards have started correctly.
7. Run the IP Office System Status Application and verify that the cards have all been recognized.
8. IP Office Manager can now be used to configure the extensions and trunk lines. For any IP500 VCM base cards, VCM Channel licenses must be added to the configuration to enable channels above the base 4.

9.5 Inserting the Feature Key

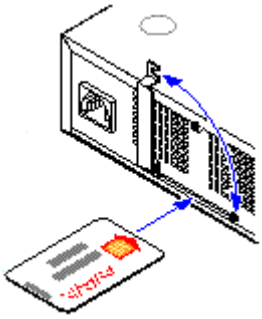

The IP500 uses a smart card feature key dongle. In addition to feature licensing the IP500 control unit uses this feature key dongle to determine various systems defaults such as A-Law or Mu-Law operation, default short codes and trunk settings.

Warnings

1. The feature key is required for all IP500 control units and must be present when the system is started and during operation. This applies even if the IP500 is not using any licensed features.
2. The feature key slot cover must remain present to protect the card and the card reader from damage.
3. Correct anti-static protection steps should be taken before handling circuit boards.
4. During this process power to the IP Office control unit must be switched off and disconnected.

Parts Required

- **IP500 Feature Key**
  The correct key will depend on the locale. The listing below is typical and may not apply in all cases. Ensure that the serial number of the key, shown on the card, is recorded.
  - ☐ **Mu-Law:** Used in North America and Korea.
  - ☐ **A-Law:** Used in all other locales.

Tools Required:

- ☐ 5mm Flat-blade screwdriver.

Procedure

1. Locate the feature key slot on the rear of the IP500 control unit. The slot is adjacent to the power input socket and is protected by a metal cover.
2. Undo the screws on the cover until it can be rotated clear of the feature key card slot.

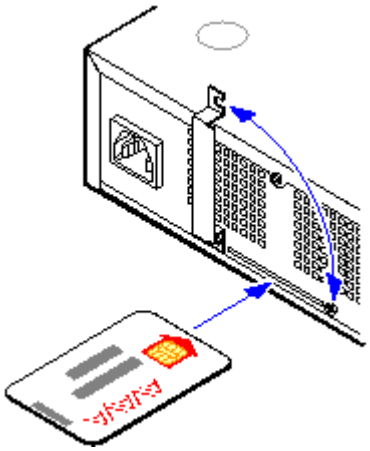

3. Insert the feature key. The card should be face up and inserted in the direction of the arrow on the card.
4. Rotate the slot cover back into position and tighten the screws.

9.6 Applying Power

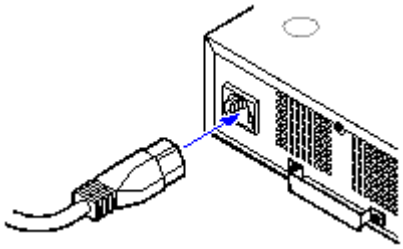

This procedure starts a new IP Office control unit not connected to any LAN. In this scenario the IP Office control unit will assume its default configuration settings.

Objective - To power up the IP Office control unit to a known state with a known set of defaults.

Warnings

1. When powering up the control unit for the first time do not connect the LAN port or WAN port of the control unit to any network.
2. The power cord must be connected directly from the control unit to the switched power outlet socket. The cord must not be fixed in anyway or routed through any permanent structure.

Parts and Equipment Required

- ☐ Switched power outlet socket.
- ☐ IP Office Control Unit.
- ☐ Locale Specific Power Cord.

Procedure

1. Connect the power cord from the power supply outlet to the power input socket on the rear of the control unit.
   - Power cords must not be attached to the building surface or run through walls, ceilings, floors and similar openings. Installation measures must be taken to prevent physical damage to the power supply cord, including proper routing of the power supply cord and provision of a socket outlet near the fixed equipment or positioning of the equipment near a socket outlet.
2. Switch on power to the control unit.
3. New IP Office 500 control units are supplied with a base software level of 4.0.0. The CPU LED on these units will flash red until the unit is upgraded to the required level of released IP Office core software.
4. The CPU LED on units that have already been upgraded from 4.0.0 will go through a green red cycle several times and then stay green on. During this time other LEDs may flash as the unit goes through its power on self test cycle.

The following are the basic default configuration settings for an IP Office system.

Network Settings	LAN Port (LAN1)	WAN Port (LAN2)
IP address	192.168.42.1.	192.168.43.1
IP Mask	255.255.255.0	255.255.255.0
DHCP Mode	Client	Client
No of DHCP IP Addresses	200.	200.

Extensions and Users
A user is automatically created for each physical extension port detected in the system. Users are assigned extension numbers starting from 201. User names take the form Extn201, Extn202, ...

- **Hunt Group**
  A single hunt group 200 called Main is created and the first 10 users are placed into that hunt group as members.
- **Incoming Call Routes**
  Two default incoming call routes are created. Voice calls are routed to the hunt group Main. Data calls are routed to the RAS user DialIn.
- **Default Short Codes**
  IP400 control units are manufactured as either A-Law or U-Law variants. For IP500 and IP500 V2 control units, A-Law or U-Law variant operation is determined by the Feature Key installed in the control unit. Depending on the variant, different short codes and trunk settings are added to the default configuration.
- **A-Law or Mu-Law**
  PCM (Pulse Code Modulation) is a method for encoding voice as data. In telephony, two methods PCM encoding are widely used, A-law and Mu-law (also called U-law). Typically Mu-law is used in North America and a few other locations while A-law by the rest of the world. As well as setting the correct PCM encoding for the region, the A-Law or Mu-Law setting of an IP Office system when it is first started affects a wide range of regional defaults relating to line settings and other values.
  - For IP400 IP Office systems, each control units was manufactured as either an A-Law variant or a Mu-Law variant.
  - For IP500 and IP500 V2 systems, the encoding default is set by the type of Feature Key installed when the system is first started.

Default DHCP/IP Address Settings

When a defaulted or new IP Office control unit is switched on, it requests IP address information from a DHCP Server on the network. This operation will occur whether a LAN cable is connected or not. The process below is done separately for both the LAN port (LAN1 in the configuration) and the WAN port (LAN2 in the configuration) on the back of the IP Office control unit.

- The syste, makes a DHCP request for what IP address information it should use.
- If a DHCP server responds within approximately 10 seconds, the control unit defaults to being a DHCP client and uses the IP address information supplied by the DHCP server.
- If no DHCP Server responds, the control unit still defaults to being the DHCP client but assumes the following default addresses:
  - LAN Port (LAN1): 192.168.42.1/255.255.255.0.
  - WAN Port (LAN2): 192.168.43.1/255.255.255.0.
  - Note that the IP Office does not check that these addresses are valid and or available on the network.
- Systems running in IP Office Essential Edition can also be configured as a DHCP server. They can also be configured to only provide DHCP for Avaya IP phones and or for remote access dial-in connections. DHCP Server options are not supported for systems running in IP Office Basic Edition - PARTNER® Mode, IP Office Basic Edition - Norstar Mode and IP Office Basic Edition - Quick Modes.

- **!** Once an IP500 V2 control unit has obtained IP address and DHCP mode settings, it will retain those settings even if rebooted without a configuration file present on the System SD card. To fully remove the existing IP address and DHCP mode setting the IP Office must be defaulted using IP Office Manager.

9.7 Check the CPU LED

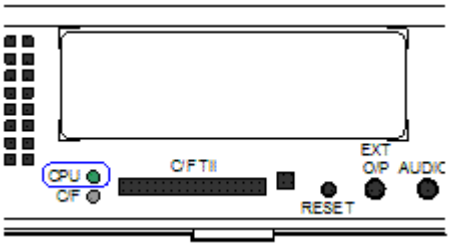

During normal operation, the CPU LED on the rear of the IP500 control unit should be green.

- **Note**
  New IP Office 500 control units are supplied with a base software level of 4.0.0. The CPU LED on these units will flash red until the unit is upgraded to the required level of released IP Office core software.

Normal Power On Sequence
When power to the control unit is switched on, the normal sequence for the CPU LED is as follows.

1. Steady Red for 3 seconds
2. Off for 10 seconds
3. Flashing alternate red/green for 4 seconds.
4. The LED should be steady green following successful start up. Note that the IP500 cards on the front of the control unit may still be going through their own start up process.
   - **Flashing RED**
     A flashing red CPU LED at this stage indicates an error. The most likely cause is a missing Feature Key card.

9.8 Upgrading the Core Software

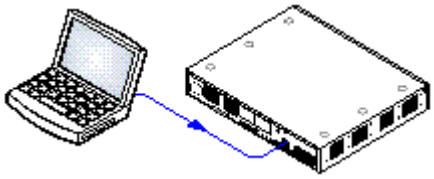

New IP500 control units are supplied with a basic level of software (4.0.0). That software is sufficient to allow LAN network connect to the control unit in order to then upgrade it to the level of IP Office software required.

Objective - Upgrade the control unit to IP Office 4.0 software.

Information Required

- ☐ **System Password** - For a new or defaulted system this is password.

Tools Required

- ☐ **Manager PC** - The Upgrade Wizard tool is part of the Manager application.

WARNINGS

- **Check IP Office Technical Bulletins**
  Check the latest IP Office Technical Bulletin for the IP Office software release before proceeding any further. It may contain information relating to changes that occurred after this document was completed. Bulletins are available from http://support.avaya.com.
- **Multiple Managers**
  If more than one copy of Manager is running it is possible for the IP Office to request BIN files from a different Manager from the one that started the upgrade process. Ensure that only one copy of Manager is running when upgrading an IP Office system.

Procedure: Upgrade Procedure

1. Using IP Office Manager, click and receive the configuration from the IP Office. If not already done this action creates a BOOTP entry in Manager for the IP Office system. This action also confirms communication between the Manager PC and the IP Office.
2. Select **File | Save Configuration As...** and save a copy of the configuration file onto the PC. This action should be completed before upgrading any IP Office system.
3. Select **File | Advanced | Upgrade**.
4. The UpgradeWiz is started and scans for IP Office unit using the Unit/Broadcast address. Adjust this address and click Refresh if the expected modules are not shown.
5. For each the unit found, the UpgradeWiz displays the module type, its current version of software installed in the unit and the software version of the .bin file that Manager has available.
6. For those units and modules where manager detects that it has a higher version available, the tick box next to the unit or module is automatically selected.
7. For those modules which you want to upgrade, tick the check box. For modules where a later version of software is available the check box may have already been automatically ticked.
8. Select **Upgrade**.
9. The system password will be requested. Enter it and click **OK**.
10. The bin files required are transferred to the system and stored in temporary memory.
11. Once all the files have been transferred, the upgrade wizard will prompt whether it okay to proceed with the upgrade process. Select Yes to continue.
12. Each module being upgraded will delete its existing core software, restart and load the new software file that was transferred. This process may take several minutes for each unit. Do not cancel or close the upgrade wizard while this process is running.
13. Following the upgrade check that the upgrade wizard now shows that the selected units and modules have upgraded. It may be necessary to select Refresh to update the information in the upgrade wizard display.

9.9 Receiving the Configuration

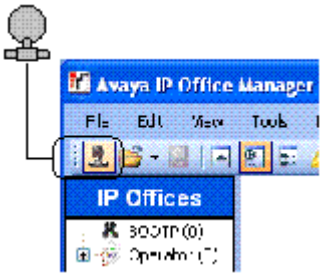

The process here applies to systems running IP Office 3.2 and higher.

Objective - Receive a configuration from an IP Office running IP Office 3.2 or higher software.

Information Required

- ☐ **Service User Name and Password**
  The defaults for full configuration access are ***Administrator*** and ***Administrator***. However these should have been changed as part of the installation process, see Configuring Security Settings.

Procedure: Receiving the Configuration

1. Select **Start | Programs | IP Office | Manager**.
2. Click in the main toolbar or select **File | Open Configuration** from the menu bar.
3. The Select IP Office window appears. After a few seconds it should list the control unit that is being setup. The default name used is the control units MAC address.
   - If the system required was not found, the address used for the search can be changed. Enter or select the required address in the Unit/Broadcast Address field and then click Refresh to perform a new search.
4. Click the check the box next to the system and then click **OK**.
5. The name and password request is displayed. The name and password must match one of those setup through the security settings. The default name and password for full configuration settings access is ***Administrator*** and ***Administrator***.
6. Successful receiving of the configuration is shown by the full configuration tree being shown in the left-hand panel. With no configuration loaded the navigation pane shows just BOOTP and Operator entries.

IP Office Default Settings
The following are the basic default configuration settings for an IP Office system.

Network Settings	LAN Port (LAN1)	WAN Port (LAN2)
IP address	192.168.42.1.	192.168.43.1
IP Mask	255.255.255.0	255.255.255.0
DHCP Mode	Client	Client
No of DHCP IP Addresses	200.	200.

Extensions and Users
A user is automatically created for each physical extension port detected in the system. Users are assigned extension numbers starting from 201. User names take the form Extn201, Extn202, ...

- **Hunt Group**
  A single hunt group 200 called Main is created and the first 10 users are placed into that hunt group as members.
- **Incoming Call Routes**
  Two default incoming call routes are created. Voice calls are routed to the hunt group Main. Data calls are routed to the RAS user DialIn.

9.10 Adding Licences

32-Character license keys strings are used to activate various IP Office features. These keys are uniquely based on the feature being activated and the serial number of the Feature Key dongle installed with the IP Office system.

Licenses can be added individually to the IP Office's configuration. However the licence key file provided by Avaya from their license ordering web site generates a License.csv file containing all the ordered licenses. That file can be imported into the configuration.

Parts and Equipment Required

- ☐ **License Keys Documentation**
  Ensure that the Feature Key dongle serial number used to generate the license keys matches that of the Feature Key dongle installed and that all the licenses required have been included.

Importing a License.csv File

1. Copy the License.csv file to the Manager PC.
2. Start IP Office Manager and receive the IP Office system's configuration.
3. Select **File | Import/Export | Import...** .
4. Click the button next to Look In and browse to and select the folder containing the license file.
5. The file should be listed as Available along with an indication of the number of licenses it contains. Select the check box next to the file name and then clock OK.
6. Click on to send the configuration back to the IP Office.
7. Use Manager to receive the configuration again and check that the status of the licenses. They should now be Valid.

Manually Adding Licenses

Use this process to individually copy and paste license keys into the configuration. Cutting and pasting removes any errors that may be caused by the incorrect typing of any license key.

1. Start IP Office Manager and receive the IP Office system's configuration.
2. Select **License**.
3. To add a license, click and select **License**. Enter the new license and click **OK**.
4. The **Status** of the new license should show ***Unknown*** and name the license as expected. If its **Status** is ***Unknown*** and name ***Invalid***, the most likely cause is incorrect entry of the license key characters.
5. Repeat the process for any other licences
6. Click on to send the configuration back to the IP Office.
7. Use Manager to receive the configuration again and check that the status of the licenses. They should now be ***Valid*** .

9.11 Adding External Expansion Modules

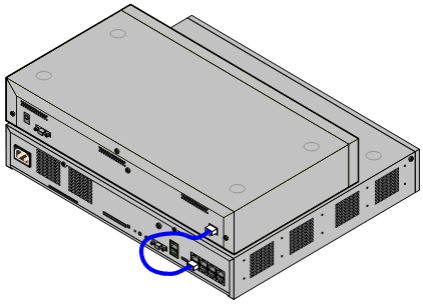

External expansion modules connect to the IP Office control unit using an expansion interconnect cable.

Objective - Connect the external expansion modules and then restart the control unit so that the new modules are recognized.

Each module is supplied with an expansion connect cable and a power supply unit 36.

An appropriate locale specific power cord 37 for the power supply unit, and cables 39 for the ports on the front of the module must be ordered separately.

- Each external expansion module is supplied with a blue 1 meter (3'3'') expansion interconnect cable. This cable must be used when connecting to expansion ports on the rear of a control unit.
- When connecting to expansion ports on an IP500 4-Port Expansion card, a yellow 2 meter (6'6") expansion interconnect cable can be used in place of the standard blue cable. 4 Yellow cables are supplied with the IP500 4-Port Expansion card.

Installation Requirements

- ☐ Installation space either on or under the existing IP Office control unit.
- ☐ Switched power outlet socket.
- ☐ Available EXPANSION port on the control unit.
- ☐ Grounding Requirements
  - ☐ **Functional Grounding**
    Connection of a functional earth 41 is:
    - ☐ Recommend for all modules.
    - ☐ Connection of a functional ground is mandatory for Analog Trunk module.
  - ☐ **Protective Grounding**
    Connections of a protective ground via surge protection equipment 42 is:
    - ☐ Mandatory for Analog trunk modules in the Republic of South Africa.
    - ☐ Mandatory for Digital Station and Phone modules connected to out of building extensions.
    - ☐ Mandatory for Digital Station V2 and Phone V2 modules.

Tools Required

- ☐ Manager PC.
- ☐ Tools for rack mounting 206 (optional).

Parts and Equipment Required

- ☐ **External Expansion Module**.
  Each module is supplied with a suitable external power supply unit and a 1m blue interconnect cable. 2m Yellow interconnect cables are supplied with the IP500 4-Port Expansion card and should only be used with that card.
- ☐ Power cord for the power supply unit 37.
- ☐ Rack mounting kit 43(optional).
- ☐ Cable labeling tags.

Procedure

1. Switch off power to the IP Office control unit.
2. Attach the external expansion module's power supply.
3. Connect the expansion interconnect cable from the module's EXPANSION port to the first free EXPANSION port on the control unit.

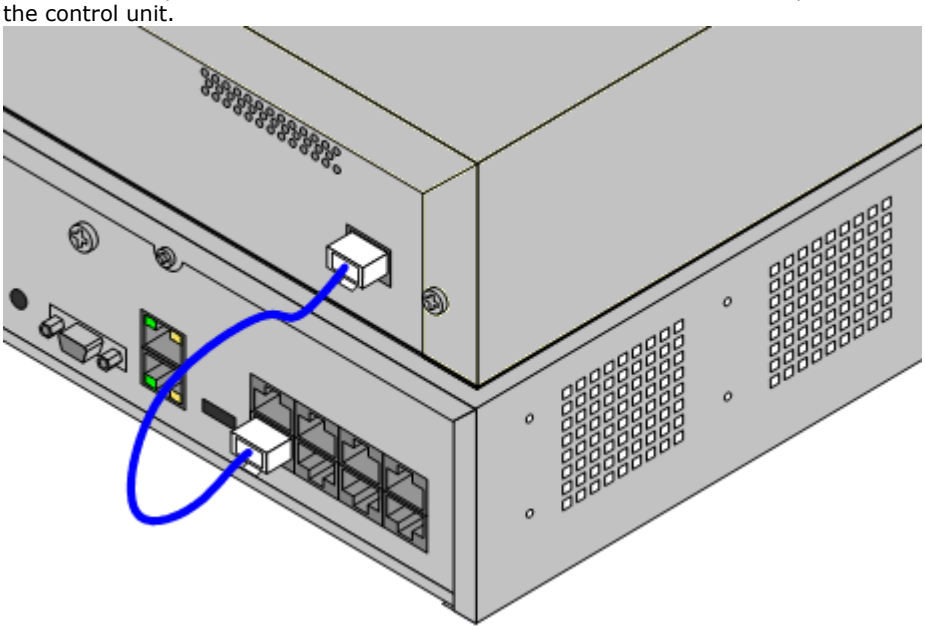

4. Make careful note of the port used and include this detail on the cable label and any other system records.
5. Switch on power to the module. Wait for the center LED on the front of the module to change from red to green.
6. Switch on power to the control unit.
7. Once the control unit has rebooted, using Manager receive the system configuration.
8. Click on **Unit** in the left-hand panel.
9. Check that the list of units shown in the right-hand panel is correct.
10. The external expansion modules should be upgraded to the same level of software as the control unit. Do this by repeating the IP Office upgrade process (see K. Upgrading the Core Software 195).

9.12 Rack Mounting

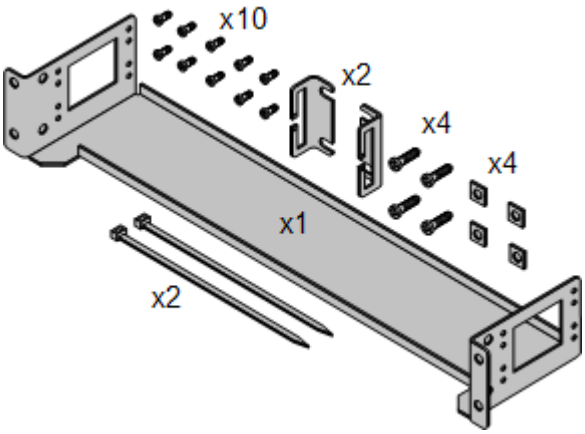

The IP500 control unit and IP500 external expansion units can be rack mounted if required into 19-inch rack systems. This requires an IPO IP500 RACK MNTG KIT (SAP 700429202) for each unit.

The kit includes:

- A rack mounting bracket and screws for attachment of the bracket to the unit
- Nuts and bolts for rack attachment.
- Brackets and cable ties for cable tidying.

As indicated in the diagram following, the rack mounting bracket can be used in several positions on the unit. IP400 external expansion units used in an IP500 system can also be rack mounted but use a separate IP400 Rack Mounting Kit.

Environmental Requirements

In addition to the existing environmental requirements 60 for an IP Office system, the following additional factors must be considered when rack mounting a unit:

1. Rack Positioning - Ensure compliance with the rack manufacturers safety instructions. For example check that the rack legs have been lowered and fixing brackets have been used to stop toppling.
2. Elevated Operating Ambient - If installed in a closed or multi-unit rack assembly, the operating ambient temperature of the rack environment may be greater than room ambient. Therefore, consideration should be given to installing the equipment in an environment compatible with the maximum ambient temperature (Tma) specified by the manufacturer.
   - ☐ Operating Temperature: 5°C (40°F) to 40°C (104°F).
   - ☐ Operating Humidity: 10% to 95% non-condensing.
3. Reduced Air Flow - Installation of the equipment in a rack should be such that the amount of air flow required for safe operation of the equipment is not compromised. Proper ventilation must be maintained. The side ventilation slots on the IP500 control unit should not be covered or blocked.
4. Mechanical Loading - Mounting of the equipment in the rack should be such that a hazardous condition is not achieved due to uneven mechanical loading.
5. Circuit Overloading - Consideration should be given to the connection of the equipment to the supply circuit and the effect that overloading of the circuits might have on overcurrent protection and supply wiring. Appropriate consideration of equipment nameplate ratings should be used when addressing this concern.
6. Reliable Earthing - Reliable earthing of rack-mounted equipment should be maintained. Particular attention should be given to supply connections other than direct connections to the branch circuit (e.g. use of power strips).
7. ⚠ Only the screws provided with the mounting kit should used to attach the brackets to the control unit.

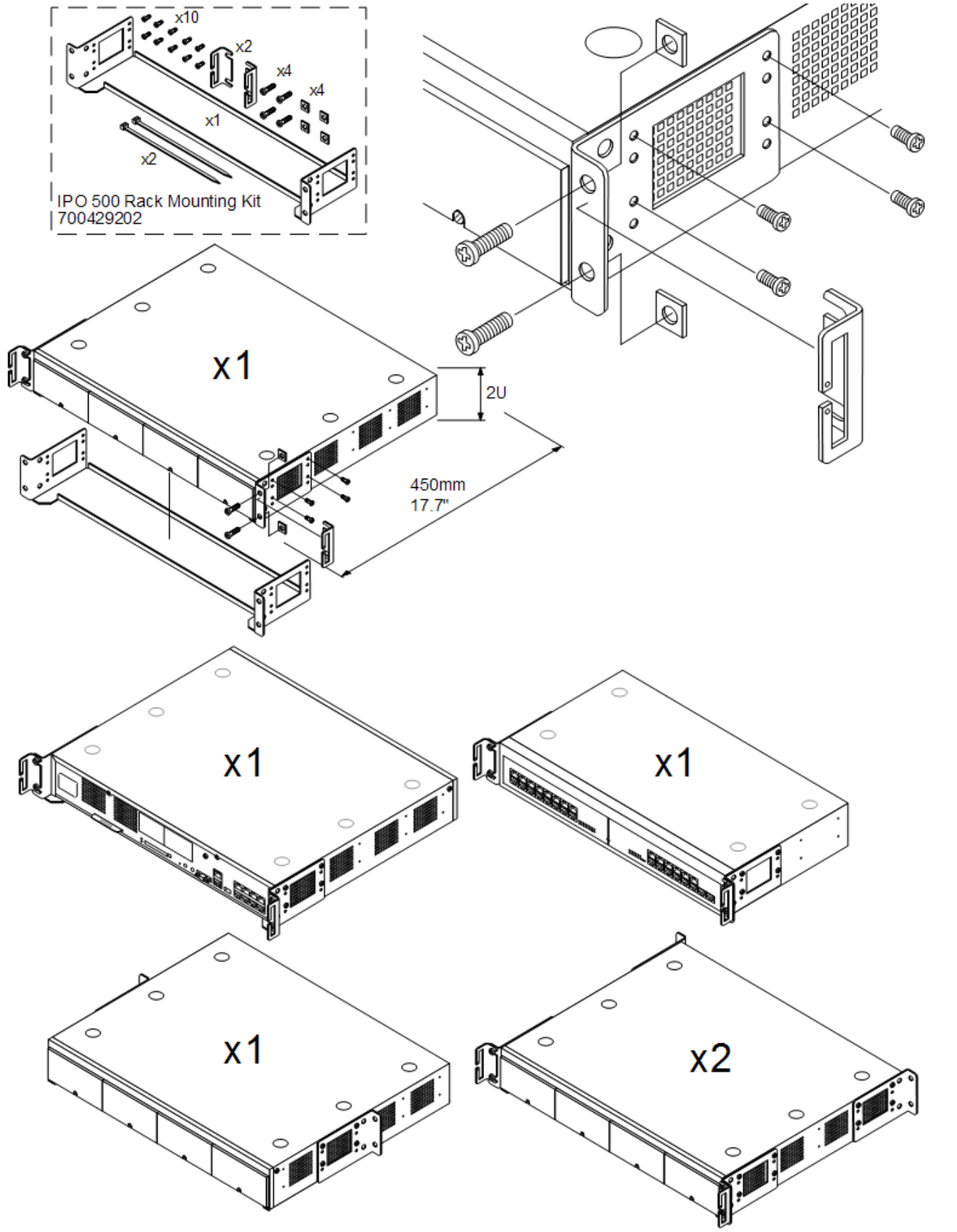

- ⚠ Only the screws provided with the mounting kit should used to attach the brackets to the control unit.

9.13 Wall Mounting

IP500, IP500 V2 control units and IP500 external expansion modules can be wall mounted. To do this, a wall mounting kit is required in addition to suitable wall fixings.

In addition to the existing environmental requirements 60 for an IP Office system, the following additional requirements apply when wall mounting a unit:

- The wall surface must be vertical, flat and vibration free. Attachment to temporary walls is not supported.
- Only the screws provided with the mounting kit should used to attach the brackets to the control unit.

The following wall mounting kits exist.

- **IPO IP500 RACK MNTG KIT V3** *(SAP Code 700503160)*
  IPO IP500 RACK MNTG KIT V2 *(SAP Code 700500923)*
  These kits can be used for wall and rack mounting of an IP500 or IP500 V2 control unit and IP500 external expansion modules. The kits incorporates cable routing at the front and rear of the unit. For wall mounted control units it allows orientation of the control unit base card slots to the left or to the right.

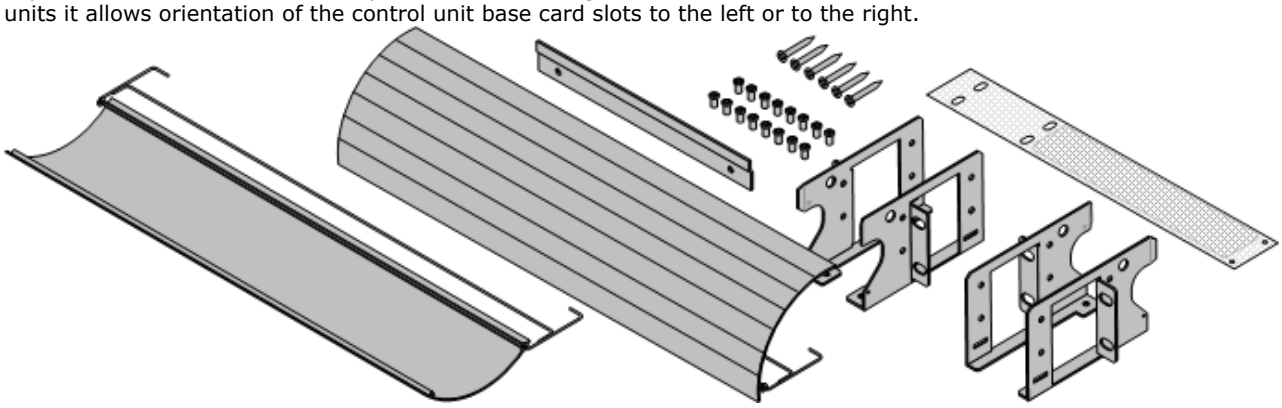

- **IPO IP500 WALL MNTG KIT** *(SAP Code 700430150)*
  This old design of wall mounting kit can be used for wall mounting an IP500 or IP500 V2 control units only. It does not provide any cable routing and requires the control unit to be mounted with the base card slots to the right only.

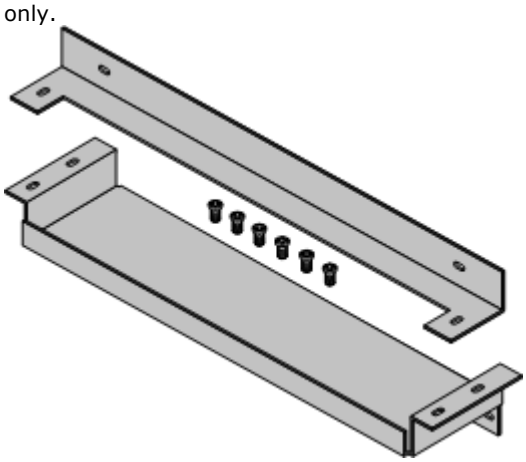

9.13.1 Wall Mounting Kit V2/V3

These notes relate to the **IPO IP500 RACK MNTG KIT V2** *(SAP 700500923)* and **IPO IP500 RACK MNTG KIT V3** *(SAP 700503160)*. These kits can be used to wall or rack mountIP500v2 control units and IP500 external expansion modules.

The kits includes all components necessary for wall mounting onto a plywood surface. The use of the cable covers is optional.

In addition to the existing environmental requirements 60 for an IP Office system, the following additional requirements apply when wall mounting a unit:

- The wall surface must be vertical, flat and vibration free. Attachment to temporary walls is not supported.
- Only the screws provided with the mounting kit should used to attach the brackets to the control unit.
- The installation must be done by a service person only.
- For control units, the mesh flame screen must be installed on the bottom edge of the control unit before mounting.
  - For the V3 kit, the flame screen attaches to the outside of the control unit.
  - For the V2 kit, the flame screen is inserted inside the control unit chassis. To do this you must wait at least 15 minutes after removing the power cord before fitting the flame screen.
- Ensure that the system has been shutdown and power has been removed from all the units. Shutdown the system using a shutdown command and then remove power. Do not simply remove the power.
- A suitable mounting surface of at least 19mm (0.75 inch) plywood is required.
- Full installation instructions are included with the kit.

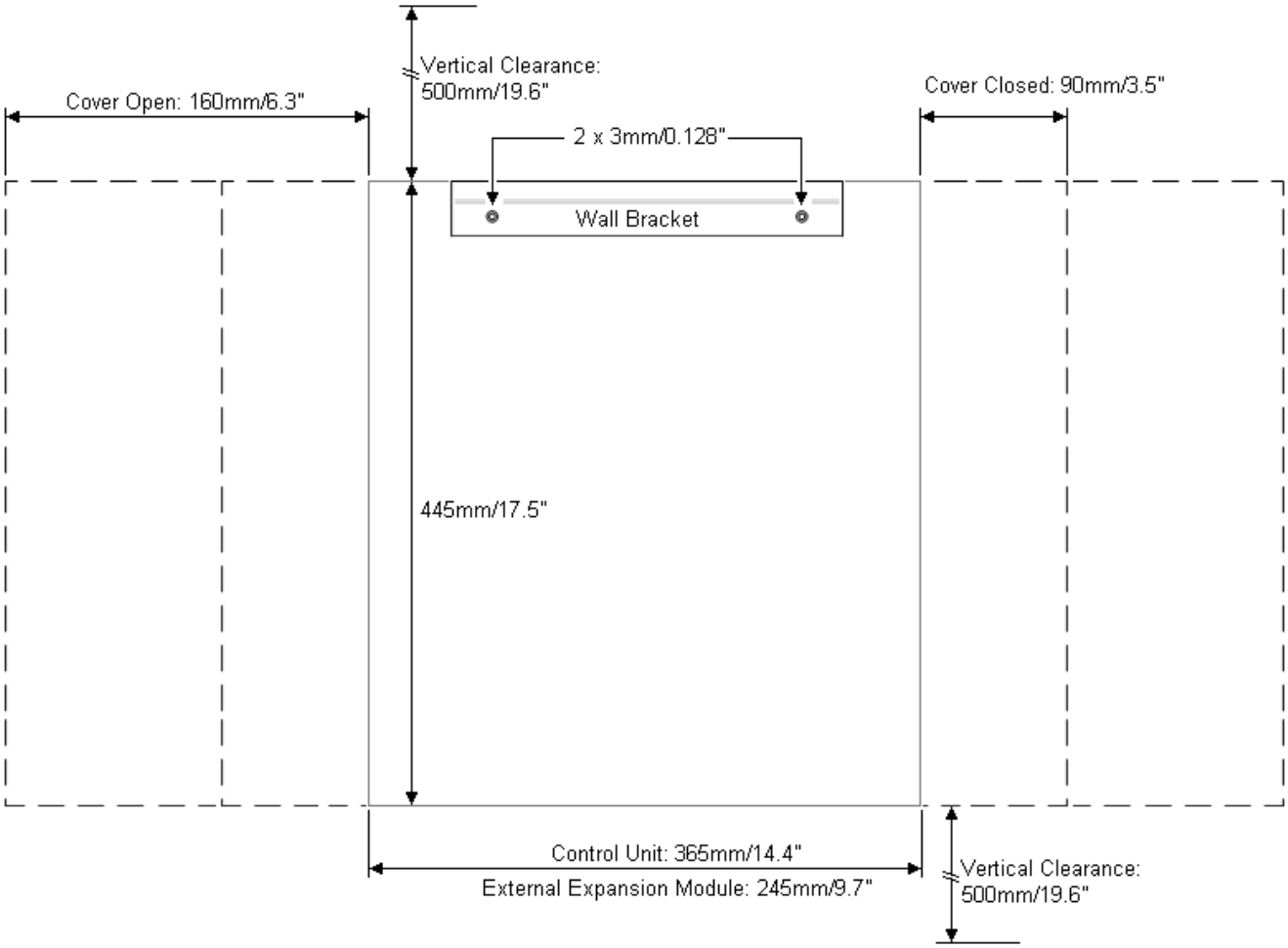

9.13.2 Wall Mounting Kit V1

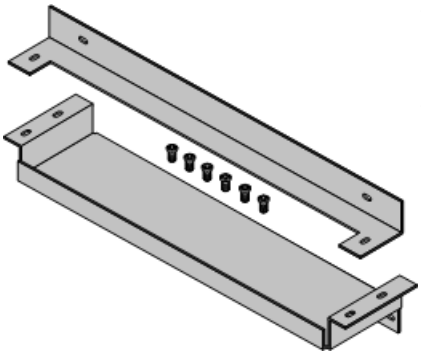

These notes relate to the older design of wall mounting kit *(SAP 70043015)* used for IP500 and IP500 V2 control units. This kit cannot be used for external expansion modules.

The kit includes two brackets, one top and one bottom, and screws for attachment to the control unit. Additional 4 x 4.5mm fixtures and fittings are required suitable for the wall type.

In addition to the existing environmental requirements 60 for an IP Office system, the following additional requirements apply when wall mounting a unit:

- The wall surface must be vertical, flat and vibration free. Attachment to temporary walls is not supported.
- Only the screws provided with the mounting kit should used to attach the brackets to the control unit.
- The brackets must be used as shown, with the deeper tray-like bracket used at the bottom of the wall mounted control unit.

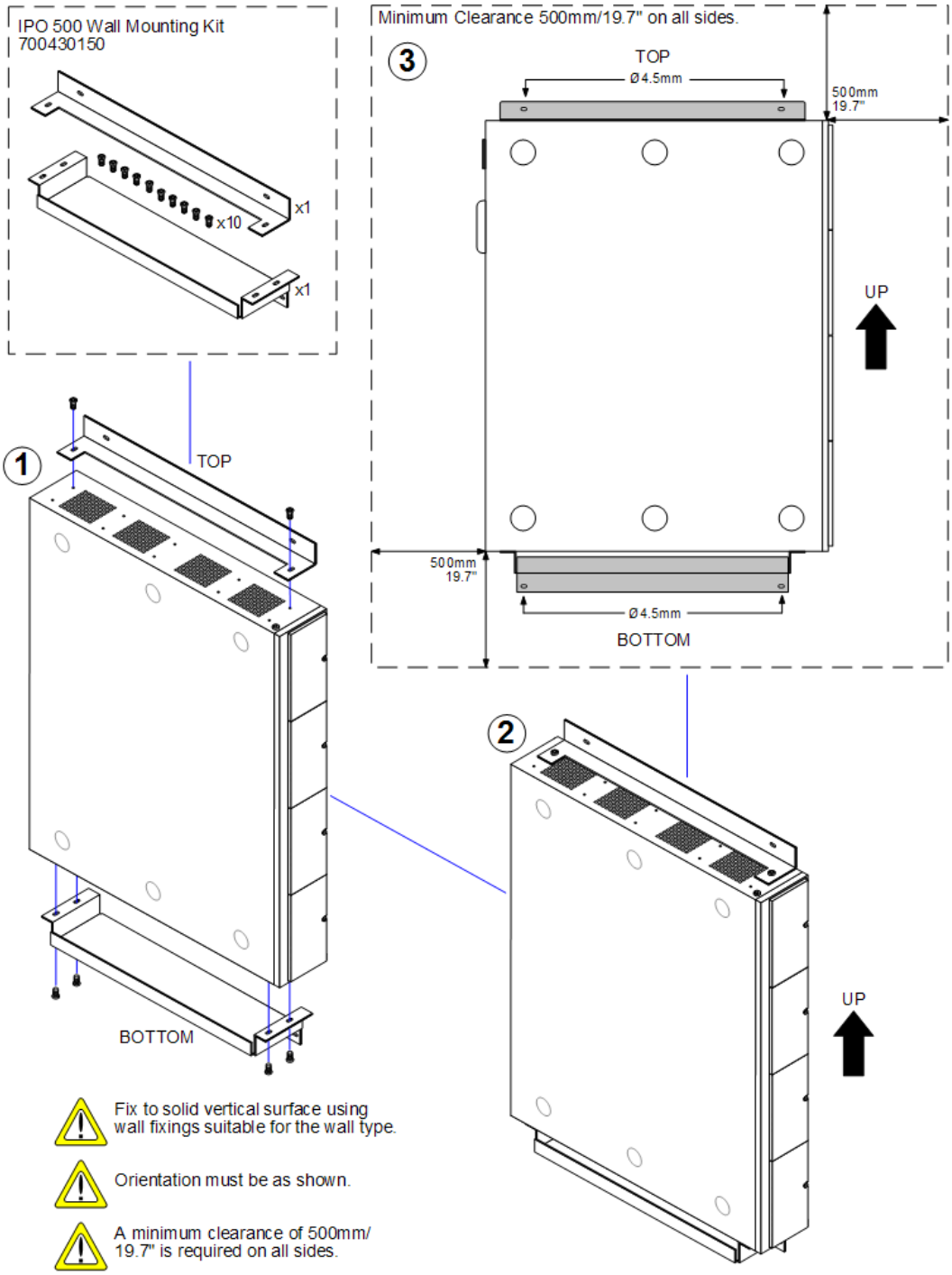

9.14 Grounding

Use of ground connections reduces the likelihood of problems in most telephony and data systems. This is especially important in buildings where multiple items of equipment are interconnected using long cable runs, for example phone and data networks.

All IP Office control units and external expansion modules must be connected to a functional ground. Where the unit is connected to a power outlet using a power cord with an earth lead, the power outlet must be connected to a protective earth.

In some cases, such as ground start trunks, in addition to being a protective measure this is a functional requirement for the equipment to operate. In other cases it may be a locale regulatory requirement and or a necessary protective step, for example areas of high lightning risk.

- ⚠ **WARNING**
  During installation do not assume that ground points are correctly connected to ground. Test ground points before relying on them to ground connected equipment.
- **Additional protective equipment**
  In addition to grounding, additional protective equipment will be required in the following situations.
  - On any Digital Station or Phones external expansion module connected to an extension located in another building. Refer to "Out of Building Telephone Installations 42".
  - In the Republic of South Africa, on all Analog Trunk external expansion modules (ATM16) and on any control units containing an analog trunk cards (ATM4/ATM4U).

Tools Required

- ☐ M4 Cross-Head Screwdriver.
- ☐ Tools suitable for crimping a cable spade.

Parts and Equipment Required

- ☐ 14AWG Solid copper wire for ground connection.
- ☐ Cable sleeve matching local regulator requirements. Typically green for a functional ground and green/yellow for a protective ground.

The ground point on IP Office control units and expansion modules are marked with a ⏚ or ⏚ symbol. Ground connections to these points should use a 14 AWG solid wire with either a green sleeve for a functional ground or green and yellow sleeve for a protective ground.

IP500/IP500 V2 Control Unit

On IP500 and IP500 V2 control units the ground point is located above the RS232 DTE port.

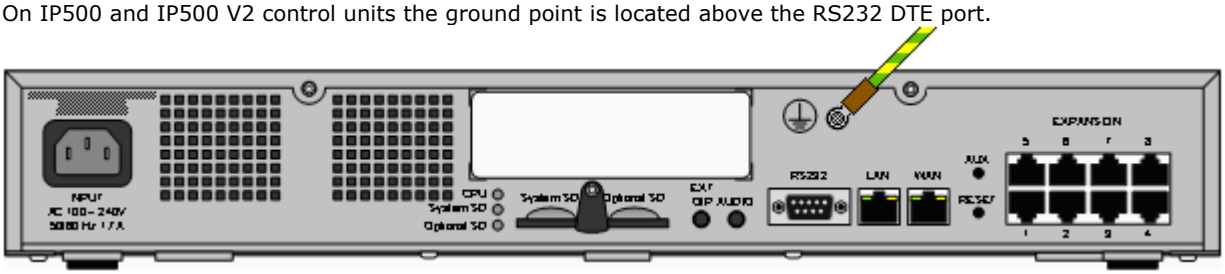

External Expansion Modules

On expansion modules, the ground point is a 4mm screw located towards the right on the rear of the module.

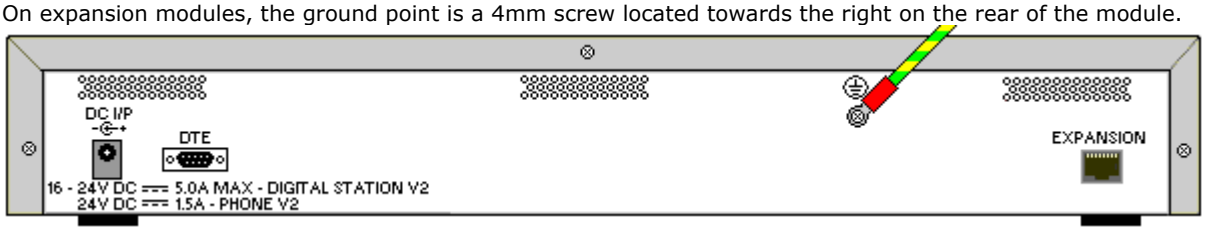

- On some older modules, the dedicated ground point screw is not present. In those cases, the top-center cover fixing screw (3mm) can be used as an alternative ground connection point. A toothed washer should be added to ensure good contact.

Chapter 10.
System Components

10. System Components

This section covers the individual components that can comprise an IP Office installation.

- **Control Units** 209
- **IP500 Base Cards** 215
- **IP500 Trunk Daughter Cards** 232
- **IP500 External Expansion Modules** 237
- **Feature Keys/SD Cards** 250
- **IP400 Trunks Cards** 253
- **IP400 Internal Cards** 258
- **IP400 External Expansion Modules** 260
- **Mounting Kits** 274
- **Phones** 276
- **Phone Add-Ons** 354
- **Ancilliary Systems** 366
- **Applications** 368
- **Physical Ports** 389
- **Licenses** 405

Additional information is included for:

- **Hardware Software Compatibility** 426
- **Hardware PCS Levels** 426
- **TAA Hardware** 426

10.1 IP500 V2 Control Unit

The slots are numbered 1 to 4 from left to right. They can be used in any order. However if the capacity for a particular type of card is exceeded, the card in the rightmost slot will be disabled. The unit must not be used with uncovered slots.

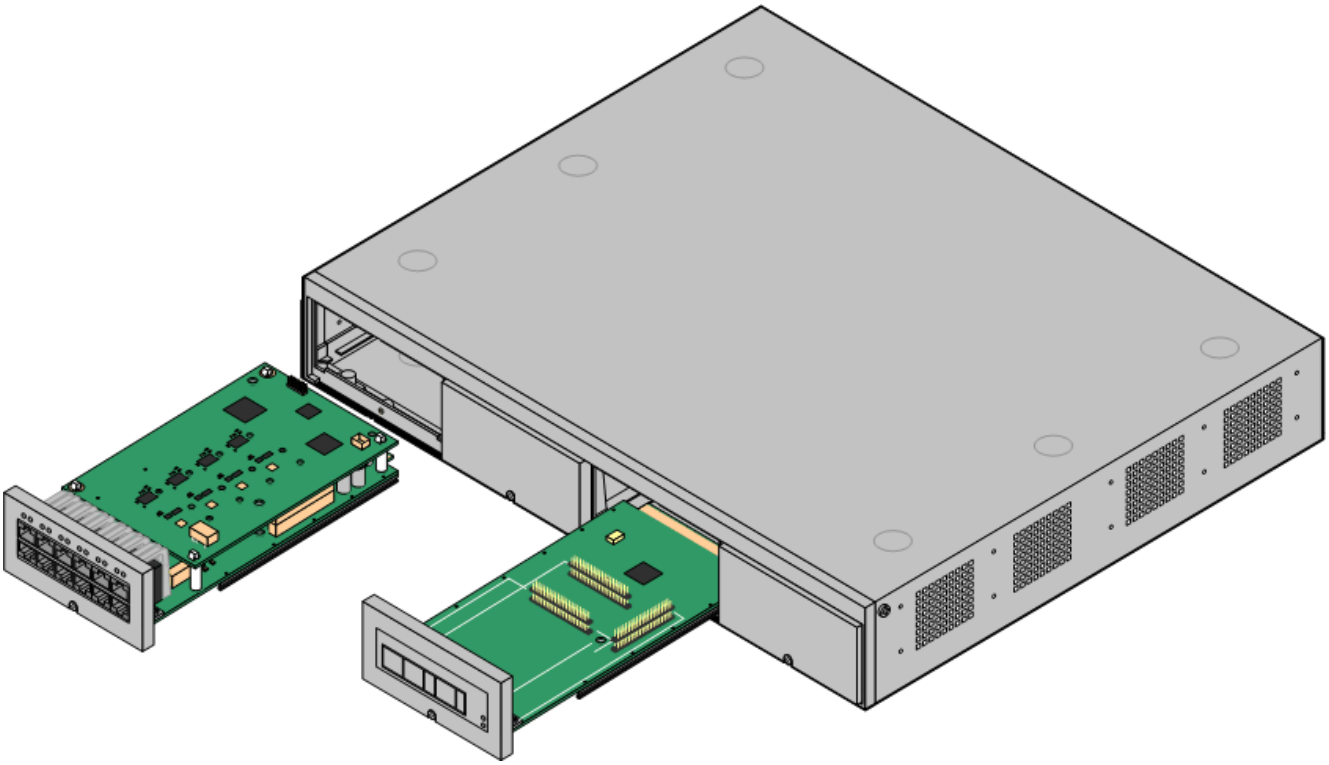

Feature	Capacity
Maximum Extensions	Up to 384 extensions in IP Office Essential Edition. Up to 100 extensions in IP Office Basic Edition - PARTNER® Mode, IP Office Basic Edition - Norstar Mode and IP Office Basic Edition - Quick Modemodes.
Conference Parties	128 as standard but maximum 64 in any individual conference. Silence suppression is applied to conferences with more than 10 parties.
Trunks Cards	4. Any combination of IP500 trunk daughter cards and up to 2 IP400 trunk cards.
Voice Compression Channels	Up to 148 channels using up to IP500 VCM, IP400 VCM and IP500 Combination cards.
Voicemail Channels	Maximum 40 usable for Voicemail Pro/TAPI WAV connection sessions subject to available licenses. For Embedded Voicemail, up to 6 (2 by default, additional channels require licenses).
Locales	Supported in all IP Office locales 51.
Software Level	IP Office Essential Edition: 6.0 minimum. IP Office Basic Edition - PARTNER® Mode: 6.0 minimum. IP Office Basic Edition - Norstar Mode: 6.1 minimum. IP Office Basic Edition - Quick Mode: 7.0 minimum. Bin file = ip500v2.bin.
Power Supply	Internal power supply unit.
Mounting	Free-standing, rack mounted (requires IPO IP500 RACK MNTG KIT) or wall mounted (requires IPO IP500 WALL MNTG KIT).
Dimensions	Width: 445mm/17.5". Depth: 365mm/14.4". Height: 73mm/2.9"/2U. Clearance: 90mm minimum all sides, 220m at front.
Memory	Maximum configuration file size: 2048KB.

Name		Description	Country	SAP Code
IP500 V2 Control Units	**IPO IP500 V2 Cntrl Unit**	IP Office 500 V2 Control Unit		700476005
	IPO IP500 V2 Cntrl Unit TAA	" Trade Agreements Act 426 compliant variant.		700501510
Avaya SD Memory Card	**IPO IP500 V2 SYS SD CARD AL**	IP500 V2 A-Law SD Card		700479702
	IPO IP500 V2 SYS SD CARD MUL	IP500 V2 Mu-Law SD Card		700479710
	IPO IP500 V2 SYS SD CARD PARTNER	IP500 V2 PARTNER SD Card		700479728
	IPO IP500 V2 SYS SD CARD NORSTAR	IP500 V2 Norstar SD Card		700500948
	AVAYA B5800 BRANCH GATEWAY	IP500 V2 Branch SD Card		700501066
IEC60320 C13 Earthed Power Cord 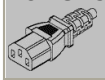	**IPO - PWR LEAD (EARTHED) EU CEE7/7**	CEE7/7	Europe	700289762
	IPO - PWR LEAD (EARTHED) UK	BS1363	United Kingdom	700289747
	IPO - PWR LEAD (EARTHER) US	NEMA5-15P	America	700289770
Mounting Kits 202	**IPO IP500 RACK MNTG KIT V3**	IPO IP500 WALL MNTG KIT V3		700503160
Miscellaneous	**IP500 Blanking Plate Kit**	IP500 Blanking Plate Kit		700429194

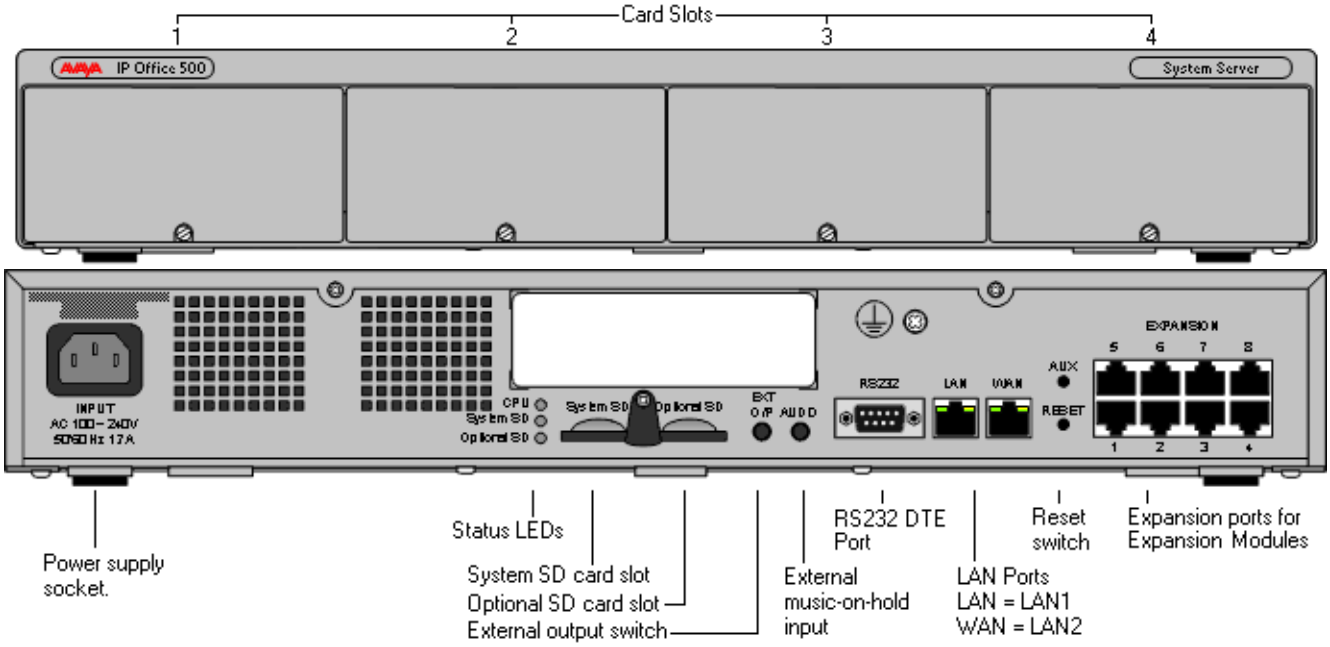

Ports	Description
AUDIO 392	3.5mm Stereo jack socket. Used for external music on hold source input.
AUX 165	If pressed during a restart of the control unit, the control unit skip booting 165 from the ***/primary*** folder on the System SD card. If pressed for more than 5 seconds when a system is running, the control unit will shutdown 128 for 10 minutes.
CPU	Indicates the status of the control unit. • **Alternate red/green** = Starting up. • **Green on** = Okay. • **Red on** = No software. • **Flashing Red** = Error/Shutdown.
EXPANSION 398	RJ45 socket. Used for direct connection to external expansion modules using the Expansion Interconnect cable supplied with the expansion module.
EXT O/P 146	3.5mm Stereo jack socket. Used for switching external relay systems such as door entry controls. The port contains two independent switches controlled by the IP Office.
INPUT 37	AC power input port.
LAN 399	RJ45 socket. The port is a full-duplex 10/100Mbps auto-sensing, MDI crossover port. With the WAN port forms a managed layer 3 Ethernet switch.
Optional SD 162	Used for the Optional SD card. The LED is used in the same way as for the System SD *(see below)*.
RESET 154	This switch is used to restart the IP Office, optionally erasing the configuration and or the core software in the process. See Reset Button 154.
RS232 155	9-Way D-Type socket. Used for system maintenance.
System SD 162	Used for the System SD card,. The LED is used as follows. • **Off** = Card shutdown 178. • **Green on** = Card present. • **Green flashing** = Card in use. • **Orange steady** = Reset imminent. • **Red flashing** = Card initializing or shutting down. • **Red fast flashing** = card full • **Red steady** = Card failure/wrong type.
WAN 399	RJ45 socket. The port is a full-duplex 10/100Mbps auto-sensing, MDI crossover port. With the WAN port forms a managed layer 3 Ethernet switch. This port is not supported on systems running in IP Office Basic Edition - PARTNER® Mode, IP Office Basic Edition - Norstar Mode or IP Office Basic Edition - Quick Modes.
⏚	Used for connection of a functional or protective ground 96. Use of a ground for all systems is recommended and for some locales may be a regulatory requirement.

10.2 IP500 Control Unit

The slots are numbered 1 to 4 from left to right. They can be used in any order. However if the capacity for a particular type of card is exceeded, the card in the rightmost slot will be disabled. The unit must not be used with uncovered slots.

- This item is no longer sold as new by Avaya but is still supported for Release 8.1.

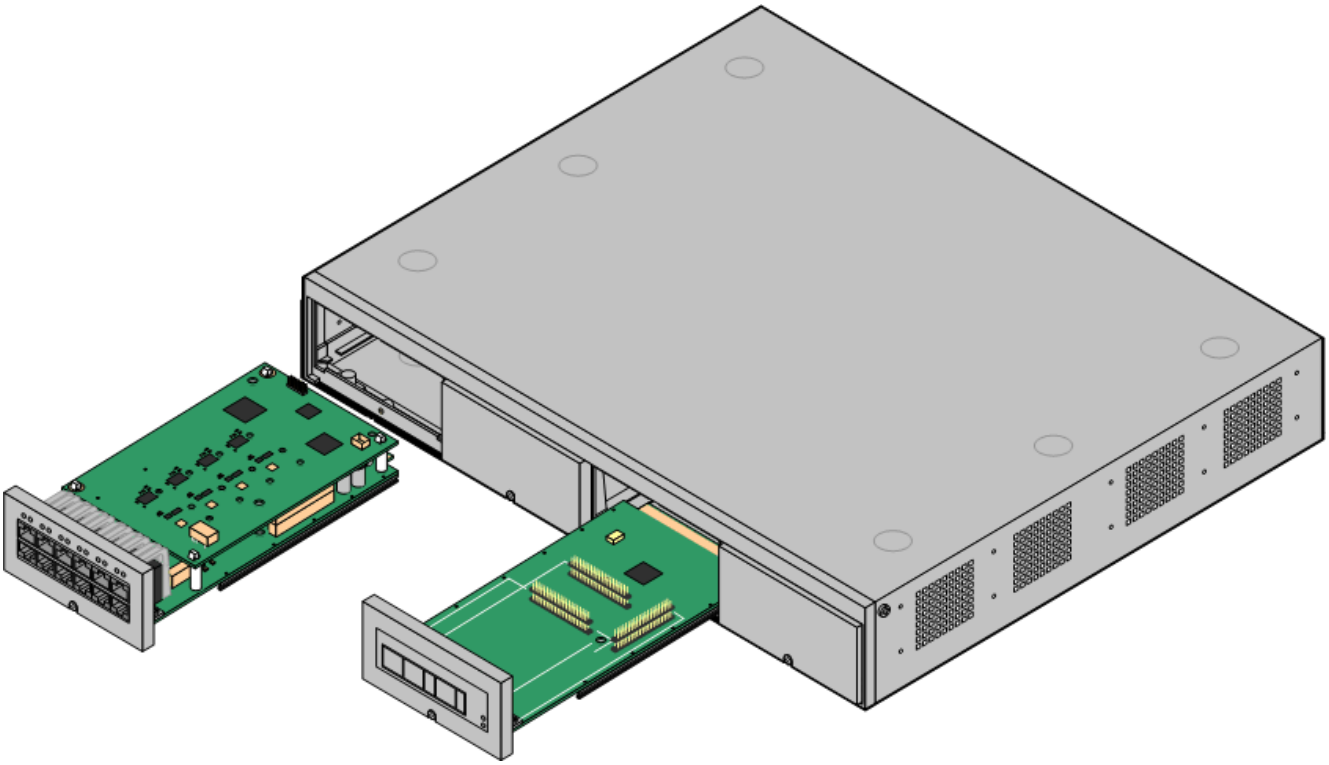

Feature	Capacity
Maximum Extensions	Up to 384 extensions.
Conference Parties	128 as standard but maximum 64 in any individual conference. Silence suppression is applied to conferences with more than 10 parties.
Trunks Cards	4. Any combination of IP500 trunk daughter cards and up to 2 IP400 trunk cards.
Voice Compression Channels	Up to 148 channels using up to IP500 VCM, IP400 VCM and IP500 Combination cards.
Voicemail Channels	Maximum 40 usable for Voicemail Pro/TAPI WAV connection sessions subject to available licenses (maximum 30 pre-IP Office 5.0). For Embedded Voicemail, up to 6 (2 by default, additional channels require licenses).
Locales	Supported in all IP Office locales 51.
Software Level	• IP Office core software level 4.0 minimum. • Bin file = ip500.bin.
Power Supply	Internal power supply unit.
Mounting	Free-standing, rack mounted (requires IPO IP500 RACK MNTG KIT) or wall mounted (requires IPO IP500 WALL MNTG KIT).
Dimensions	Width: 445mm/17.5". Depth: 365mm/14.4". Height: 73mm/2.9"/2U. Clearance: 90mm minimum all sides, 220m at front.
Memory	Maximum configuration file size: 1024KB.

Name	Description	Country	SAP Code
IPO 500 Base Unit	IP Office 500 Control Unit		700417207
Smart Card Feature Key	Smart Card Feature Key (Mu-Law)		700417470
	Smart Card feature Key (A-Law)		700417488
IEC60320 C13 Earthed Power Cord 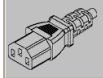	CEE7/7	Europe	700289762
	BS1363	United Kingdom	700289747
	NEMA5-15P	America	700289770
Mounting Kit 202	IPO IP500 RACK MNTG KIT V3		700503160
IP500 Blanking Plate Kit	IP500 Blanking Plate Kit		700429194

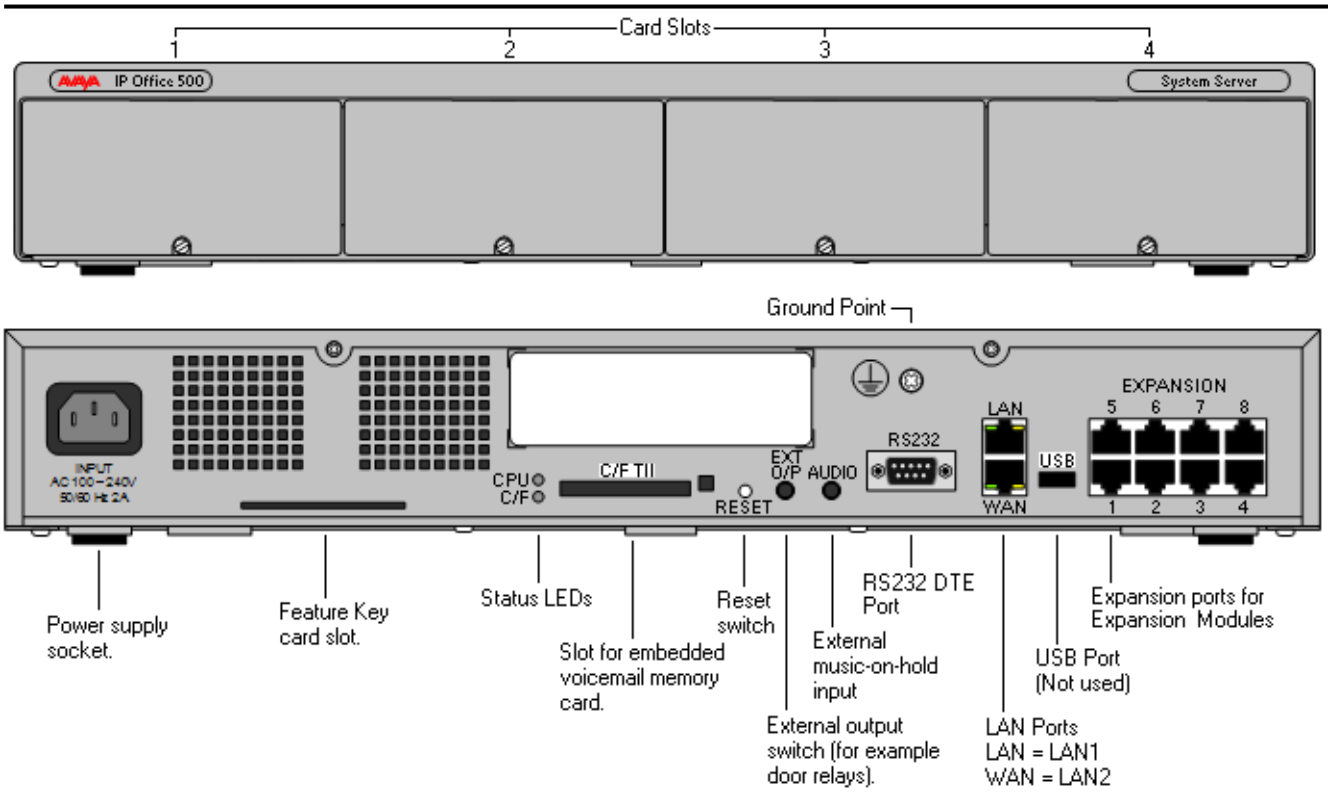

Ports	Description
AUDIO 392	3.5mm Stereo jack socket. Used for external music on hold source input.
CPU	• **Alternate red/green** = Starting up. • **Green on** = Okay. • **Red on** = No software. • **Flashing Red** = Error/Shutdown.
C/F	• **Off** = Card shutdown 178. • **Green on** = Card present. • **Green flashing** = Card in use. • **Orange steady** = Reset imminent. • **Red flashing** = Card initializing or shutting down. • **Red fast flashing** = card full • **Red steady** = Card failure/wrong type.
C/F TII	Used to house the optional Embedded Voicemail card.
EXPANSION 398	RJ45 socket. Used for direct connection to external expansion modules using the Expansion Interconnect cable supplied with the expansion module.
EXT O/P 146	3.5mm Stereo jack socket. Used for switching external relay systems such as door entry controls. The port contains two independent switches controlled by the IP Office.
INPUT	AC power input port.
LAN 399	RJ45 socket. With the WAN port forms a managed layer 3 Ethernet switch. The ports are full-duplex 10/100Mbps auto-sensing, MDI crossover ports.
RESET 154	This switch is used to restart the IP Office, optionally erasing the configuration and or the core software in the process. See Reset Button 154.
RS232 155	9-Way D-Type socket. Used for system maintenance.
USB	Not used.
WAN 399	RJ45 socket. With the LAN port forms a managed layer 3 Ethernet switch. The ports are full-duplex 10/100Mbps auto-sensing, MDI crossover ports.
⏚	Used for connection of a functional or protective ground 205. Use of a ground for all systems is recommended and for some locales may be a regulatory requirement.

10.3 IP500 Base Cards

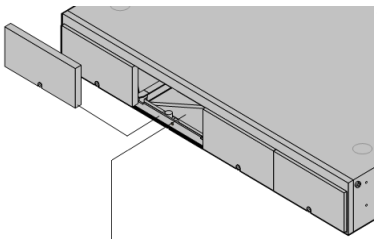

The IP500 and IP500 V2 control units have 4 slots for the insertion of IP500 base cards. The slots are numbered 1 to 4 from left to right. Normally they can be used in any order, however if the capacity for a particular type of card is exceeded, the card in the rightmost slot will be disabled.

Each base card includes an integral front panel with ports for cable connections. Typically the first 8 ports on the left are for connection of extension devices. The 4 ports on the left are used for connection of trunks if a trunk daughter card 26 is added to the base card.

IP500 Digital Station Base Card 225

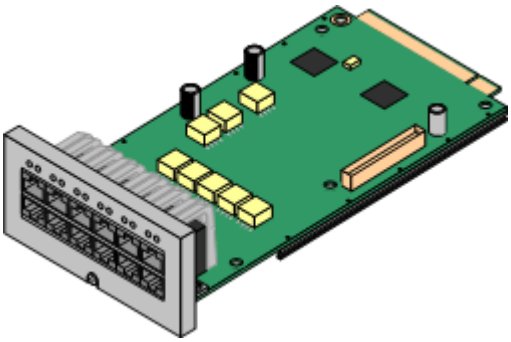

This card provides 8 DS (digital station) ports for the connection of Avaya digital phones.

- The card can be fitted with an IP500 trunk daughter card 26 which uses the base card ports for trunk connection.
- **Maximum:** 3 per control unit.
  - 4400 Series phones (4406D, 4412D and 4424D) are not supported on this card. They are supported on external expansion module DS ports.
  - Connections for 4100, 7400, M-Series and T-Series phones use the IP500 TCM8 Digital Station card.

IP500 Analog Phone Base Card 219

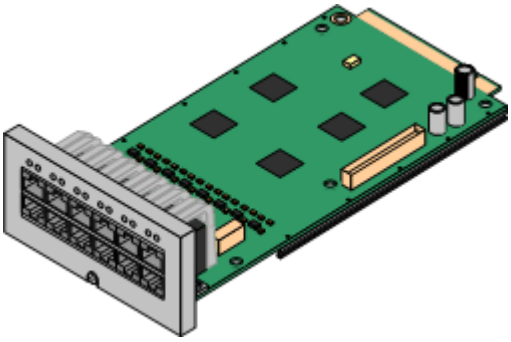

The card is available in two variants, supporting either 2 or 8 analog phone ports.

- The card can be fitted with an IP500 trunk daughter card 26 which uses the base card ports for trunk connection.
- **Maximum:** 4 per control unit.
  - The analog phone ports do not include a ringing capacitor. Where this is a requirement, connection should be via a Master socket containing ringing capacitors.
  - If fitted with an IP500 Analog Trunk daughter card, during power failure phone port 8 is connected to analog trunk port 12.

IP500 TCM8 Digital Station Card 229

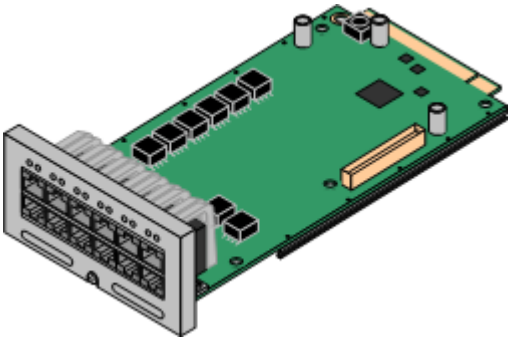

This card provides 8 TCM (digital station) ports for the connection of Avaya 4100, 7400, M-Series and T-Series phones.

- The card can be fitted with an IP500 trunk daughter card 26 which uses the base card ports for trunk connection.
- **Maximum:** 4 per control unit per IP500 V2 control unit. Not supported by IP500 control units.

IP500 VCM Base Card 230

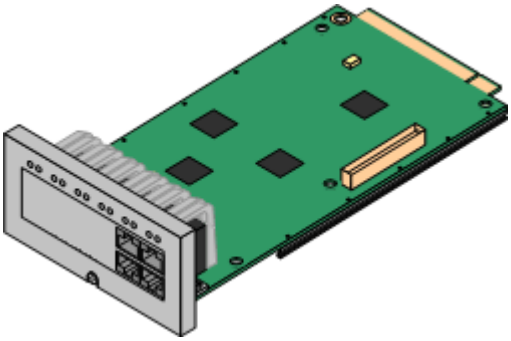

This card is available in variants supporting either 32 or 64 voice compression channels for use with VoIP calls.

- The card can be fitted with an IP500 trunk daughter card 26 which uses the base card ports for trunk connection.
- **Maximum:** 2 per control unit.

IP500 Legacy Card Carrier Base Card 228

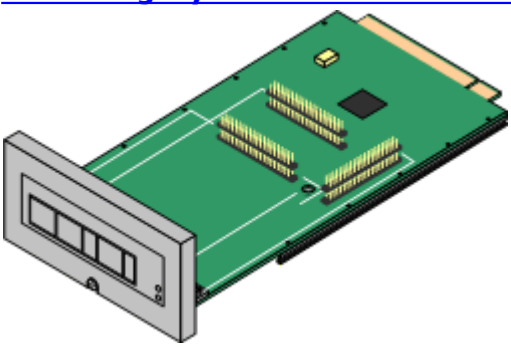

This card allows various IP400 trunk cards 27 and IP400 VCM cards 28 to be used. The front of the card includes panels that can be removed to match the trunk card fitted.

- This card does not accept any IP500 trunk daughter card.
- **Maximum:** 2 per control unit.
- **IP400 Cards Supported:** The following cards are supported.

✓ PRI T1	✓ PRI 30 E1R2 RJ45	✓ VCM 4
✓ Dual PRI T1	✓ Dual PRI E1R2 RJ45	✓ VCM 8
✓ PRI 30 E1 (1.4)	✓ BRI-8 (UNI)	✓ VCM 16
✓ Dual PRI E1	✓ ANLG 4 Uni (US only)	✓ VCM 24
		✓ VCM 30

IP500 4-Port Expansion Base Card 218

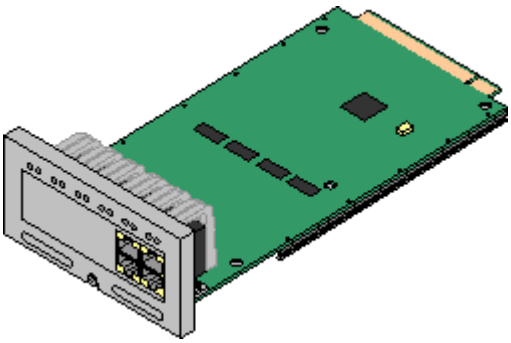

This card adds an additional 4 expansion ports for external expansion modules. The card is supplied with four 2m yellow interconnect cables.

- This card does not accept any IP500 trunk daughter card.
- **Maximum:** 1 per control unit (Right-hand slot 4 only).
- **Supported Expansion Modules:** The following external expansion modules are supported:
  - IP500 Analogue Trunk Module
  - IP500 BRI So Module
  - IP500 Digital Station Modules
  - IP500 Digital Station Modules A
  - IP500 Phone Module
  - IP400 Digital Station V2 Modules
  - IP400 Phone V2 Modules

IP500 BRI Combination Card 222

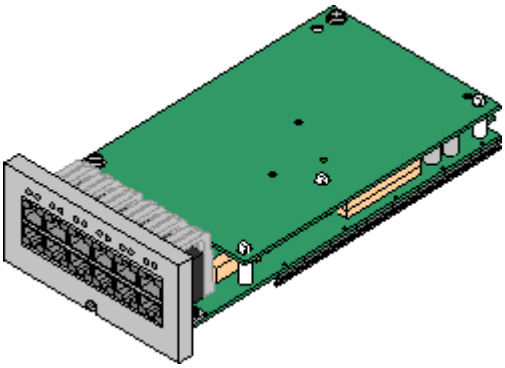

This card provides 6 digital station ports (1-6), 2 analog extension ports (7-8) and 2 BRI trunk ports (9-10, 4 channels). The card also includes 10 voice compression channels.

- This card has a pre-installed IP500 BRI trunk daughter card 26.
- **Maximum:** 2 combination cards per IP500 V2 control unit, regardless of type. Not supported by IP500 control units.
  - IP Office Basic Edition - Norstar Mode and IP Office Basic Edition - Quick Mode systems are limited to a maximum of 12 BRI channels using BRI Combination and or BRI trunk daughter cards.

IP500 ATM Combination Card/IP500 ATM Combination Card V2 220

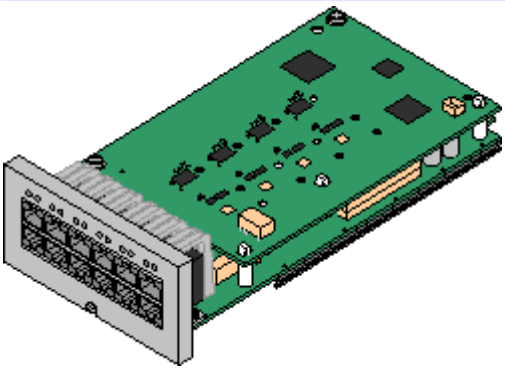

This card provides 6 digital station ports (1-6), 2 analog extension ports (7-8) and 4 analog trunk ports (9-12). The card also includes 10 voice compression channels.

- This card has a pre-installed IP500 analog trunk daughter card 26.
- **Maximum:** 2 combination cards per IP500 V2 control unit, regardless of type. Not supported by IP500 control units.
  - The analog phone ports do not include a ringing capacitor. Where this is a requirement, connection should be via a Master socket containing ringing capacitors.
  - If fitted with an IP500 Analog Trunk daughter card, during power failure phone port 8 is connected to analog trunk port 12.

IP500 ETR6 Base Card 226

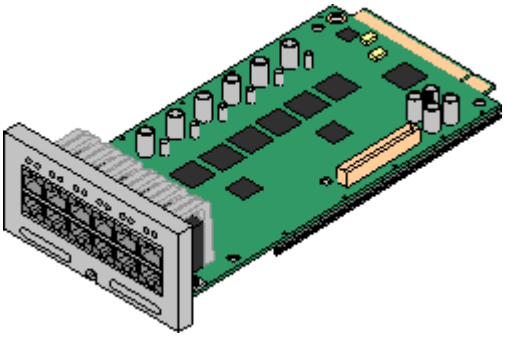

This card is only supported in an IP500 V2 control unit running in IP Office Basic Edition - PARTNER® Mode or IP Office Basic Edition - Quick Mode. It is not supported in IP Office Basic Edition - Norstar Mode or IP Office Essential Edition.

It provides 6 ETR ports for connection of ETR phones. 2 Analog extension ports are also provided for emergency use only with an analog trunk card.

- The card can be fitted with an IP500 trunk daughter card which uses the base card ports for trunk connection.
- **Maximum:** 3 per IP500 V2 control unit. Not supported by IP500 control units.
- The analog phone ports do not include a ringing capacitor. Where this is a requirement, connection should be via a Master socket containing ringing capacitors.
- If fitted with an IP500 Analog Trunk daughter card, during power failure phone ports 7 and 8 are connected to analog trunk port 12. However during normal operation analog phone ports 7 and 8 are not useable.

Unified Communications Module 223

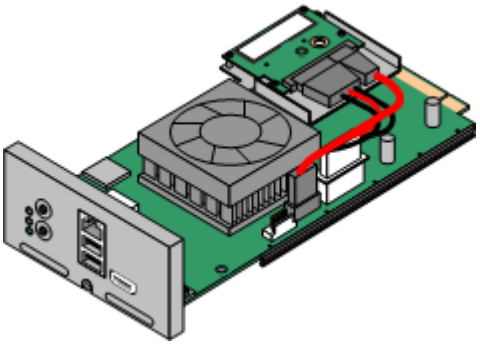

This card is only supported in an IP500 V2 control unit running in IP Office Essential Edition, IP Office Preferred Edition or IP Office Advanced Edition. It acts as an embedded Linux server for the one-X Portal for IP Office and Voicemail Pro applications. The presence of this card acts as a Preferred Edition license for the host system.

10.3.1 4-Port Expansion Card

This card is used to add 4 additional expansion ports to the IP500 and IP500 V2 control unit. This card is only supported in slot 4.

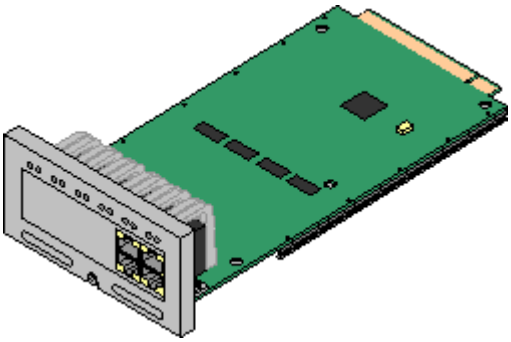

- **Supports**
  Provides 4 additional expansion ports 398 for connection of external expansion modules.
- **Supported Expansion Modules:** The following external expansion modules are supported:
  - IP500 Analogue Trunk Module
  - IP500 BRI So Module
  - IP500 Digital Station Modules
  - IP500 Digital Station Modules A
  - IP500 Phone Module
  - IP400 Digital Station V2 Modules
  - IP400 Phone V2 Modules
- **IP500 Control Unit:** ✓
- **IP500 V2 Control Unit:** ✓
- **Maximum per Control Unit:** 1 - Right hand slot 4 only.
- **IP500 Trunk Card Support:** ✗.

- Each external expansion module is supplied with a blue 1 meter (3'3'') expansion interconnect cable. This cable must be used when connecting to expansion ports on the rear of a control unit.
- When connecting to expansion ports on an IP500 4-Port Expansion card, a yellow 2 meter (6'6") expansion interconnect cable can be used in place of the standard blue cable. 4 Yellow cables are supplied with the IP500 4-Port Expansion card.

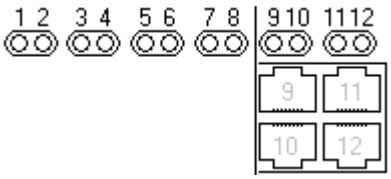

- LEDs 1 to 8 are used for the expansion ports on the rear of the control unit. LEDs 9 to 12 are used for the card's own expansion ports.

Green	**On**	Expansion module present.
Red	**Flashing**	Initializing.
Red	**On**	Error.
Orange	**Regular Flash**	Base card okay.

Name	Description	SAP Code
IPO IP500 EXP CARD 4PT	Includes 4 yellow 2 metre interconnect cables.	700472889
IPO EXP CABLE RJ45/RJ45 2M YELLOW	Only for use with the 4-Port Expansion card.	700472871

10.3.2 Analog Phone

This card is used to add analog phone ports to an IP500 and IP500 V2 control unit. It is available in two variants, providing either 2 or 8 analog extension ports.

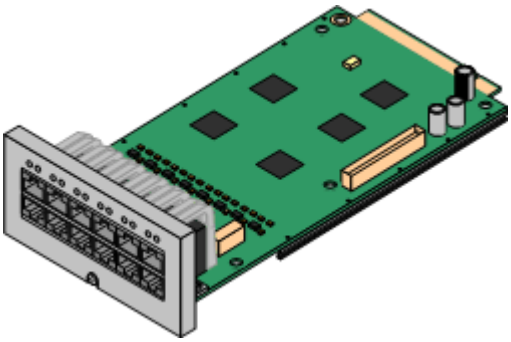

- **Supports**
  Provides either 8 or 2 analog 392 phone ports depending on card variant.
- **IP500 Control Unit:** ✓
- **IP500 V2 Control Unit:** ✓
- **Maximum per Control Unit:** 4.
- **IP500 Trunk Card Support:** ✓ 1.

Port Type	Ports	Features
Analog Extension	**1 to 8**	• Supports ICLID modes DTMFA, DTMFC, DTMFD, FSK and UK20. • REN 2 (1 for external bell device). • Off-Hook current: 25mA • Ring Voltage: 40V. • Intended for connection to two-wire analog phones, the ports do not include a ringing capacitor. For connection to 4-wire analog phones, connection should be via a master socket with ringing capacitors. • If fitted with an analog trunk card, for the Phone 8, during power failure extension port 8 is connected to the analog trunk port 12. **Port LEDs** • No status LEDs are used for analog phone extensions. • LED1 is also used for base card status: • **Red On** = Error • **Red Slow Flash** = Initializing. • **Red Flash every 5 seconds** = Card okay. • **Red Fast Flash** = System shutdown.
Optional Trunk Card Ports	**9 to 12**	The card can be fitted with one trunk daughter card of any type. The trunk daughter card then uses ports 9 to 12 on the base card for its trunk connections. **Port LEDs** LED use depends on the type of daughter card installed on the base card: • LED 9 is also used for daughter card status. • **Red On** = Error • **Red Slow Flash** = Initializing. • **Red Flash every 5 seconds** = Card okay. • **Red Fast Flash** = System shutdown. **Analog Card** • **Green on** = V1: Card installed. V2: Line connected to the port but idle. • **Green flashing** = Line in use. **PRI Card** • **Off** = No trunk present. • **Green on** = Trunk present. • **Green flashing** = Trunk in use. • **Red/Green Fast Flash** (port 9) or **Green Fast Flash** (port 10) = Alarm indication signal (AIS) from the trunk remote end. • **Red with Green Blink** (port 9) or **Green Blink** (port 10) = Port in loopback mode (set through IP Office System Monitor). **BRI Card** • **Off** = No trunk present. • **Green on** = Trunk present. • **Green flashing** = Trunk in use.

Name	Description	SAP Code
IPO 500 Extn Card Phone 2	IP Office 500 Extension Card Phone 2	700431778
IPO 500 Extn Card Phone 8	IP Office 500 Extension Card Phone 8	700417231

10.3.3 ATM Combination Card

These cards are used to add a combination of ports to an IP500 V2 control unit. Not supported by IP500 control units. The newer IP500 ATM Combination Card V2 version is supported by IP Office Release 8.1 Feature Pack 1 and higher only.

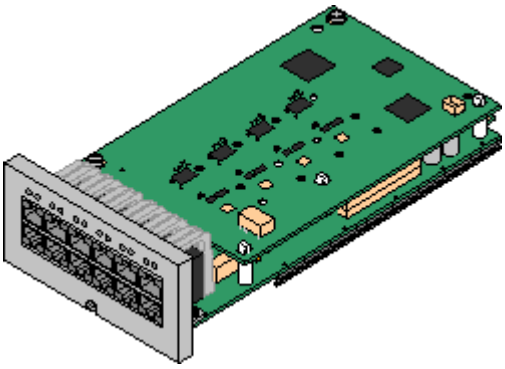

- **Supports**
  - 10 voice compression channels. Codec support is G.711, G729a and G.723 with 64ms echo cancellation. G.722 is supported by IP Office Release 8.0 and higher.
  - 6 Digital Station ports for digital stations 46 (except 3800, 4100, 4400, 7400, M and T-Series).
  - 2 Analog Extension ports.
  - 4 Analog Trunk ports:
    Depending on the version of combination card, V1 or V2, the analog trunk daughter card is equivalent to an IP500 Analog Trunk Card 4 233 V1 or V2 respectively.
- **IP500 Control Unit:** ✗
- **IP500 V2 Control Unit:** ✓
- **Maximum per Control Unit:** 2 combination cards of any type per IP500 V2 control unit.
- **IP500 Trunk Card Support:** ✓ 1. The trunk daughter card is pre-installed and cannot be replaced with another card type.
- **IP Office Software Level:** 6.0+.
  This depends on the version of the card as follow:
  - **V1:** 6.0+. New build PCS04 cards are only supported in systems running IP Office Release 6.1(20), 7.0(12) or 8.0 and higher. Refer to IP Office Technical Tip 237.
  - **V2:** IP Office Release 8.1 Feature Pack 1 or higher.

Port Type	Ports	Features
Digit Station	**1 to 6**	Provides DS 395 ports for digital stations 46 (except 4100, 4400, 7400, M and T-Series). **LEDs** • **Green Flashing** = Phone detected. • **Green On** = Phone active. • LED1 is also used for base card status: • **Red On** = Error • **Red Slow Flash** = Initializing. • **Red Flash every 5 seconds** = Card okay. • **Red Fast Flash** = System shutdown.
Analog Extension	**7 to 8**	• Supports ICLID modes DTMFA, DTMFC, DTMFD, FSK and UK20. • REN 2 (1 for external bell device). • Off-Hook current: 25mA • Ring Voltage: 40V. • Intended for connection to two-wire analog phones, the ports do not include a ringing capacitor. For connection to 4-wire analog phones, connection should be via a master socket with ringing capacitors. • During power failure extension port 8 is connected to the analog trunk port 12. • No status LEDs are used for analog phone extensions.
Analog Trunk	**9 to 12**	• DTMF, ICLID and busy tone detection. • Over-voltage/lightning protection (may still require additional protection equipment 42). • DTMF and LD (loop disconnect) dialing. • Echo cancellation. **LEDs** • **Green on** = V1: Card installed. V2: Line connected to the port but idle. • **Green flashing** = Line in use. • LED 9 is also used for daughter card status. • **Red On** = Error • **Red Slow Flash** = Initializing. • **Red Flash every 5 seconds** = Card okay. • **Red Fast Flash** = System shutdown.

Name	Description	SAP Code
IPO IP500 V2 COMB CARD ATM4	IPO IP500 V2 COMBINATION CARD ATM4	700476013
IPO IP500 V2 COMB CARD ATM4 TAA	" Trade Agreements Act 426 compliant variant.	700501513
IPO IP500 V2 COMB CARD ATM4 V2	IPO IP500 V2 COMBINATION CARD ATM4 V2	700504556

10.3.4 BRI Combination Card

This card is used to add a combination of ports to an IP500 V2 control unit. Not supported by IP500 control units.

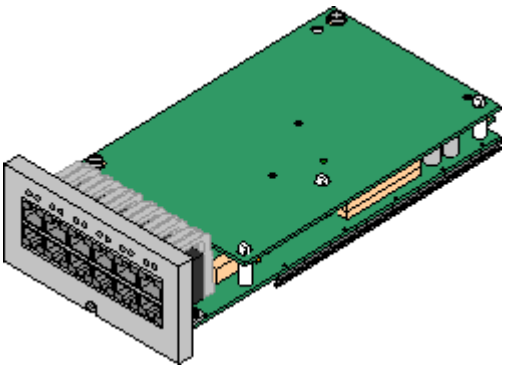

- **Supports**
  - 10 voice compression channels. Codec support is G.711, G729a and G.723 with 64ms echo cancellation. G.722 is supported by IP Office Release 8.0 and higher.
  - 6 Digital Station ports for digital stations 46 (except 3800, 4100, 4400, 7400, M and T-Series).
  - 2 Analog Extension ports.
  - 2 BRI Trunk ports (4 BRI channels).
  - 10 voice compression channels. Codec support is G.711, G729a and G.723 with 64ms echo cancellation. G.722 is supported by IP Office Release 8.0 and higher.
- **IP500 Control Unit:** ✗
- **IP500 V2 Control Unit:** ✓
- **Maximum per Control Unit:** 2 combination cards of any type.
  - IP Office Basic Edition - Norstar Mode and IP Office Basic Edition - Quick Mode systems are limited to a maximum of 12 BRI channels using BRI Combination and or BRI trunk daughter cards.
- **IP500 Trunk Card Support:** ✓ 1. The trunk daughter card is pre-installed and cannot be replaced with another card type.

Port Type	Ports	Features
Digit Station	**1 to 6**	Provides DS 395 ports for digital stations 46 (except 4100, 4400, 7400, M and T-Series). **LEDs** • **Green Flashing** = Phone detected. • **Green On** = Phone active. • LED1 is also used for base card status: • **Red On** = Error • **Red Slow Flash** = Initializing. • **Red Flash every 5 seconds** = Card okay. • **Red Fast Flash** = System shutdown.
Analog Extension	**7 to 8**	• Supports ICLID modes DTMFA, DTMFC, DTMFD, FSK and UK20. • REN 2 (1 for external bell device). • Off-Hook current: 25mA • Ring Voltage: 40V. • Intended for connection to two-wire analog phones, the ports do not include a ringing capacitor. For connection to 4-wire analog phones, connection should be via a master socket with ringing capacitors. • No status LEDs are used for analog phone extensions.
BRI Trunk	**9 to 10**	• Each trunk port supports 2B+D channels. • ETSI or AusTS013 basic rate protocol set through the IP Office configuration. **LEDs** • **Off** = No trunk present. • **Green on** = Trunk present. • **Green flashing** = Trunk in use. • LED 9 is also used for daughter card status. • **Red On** = Error • **Red Slow Flash** = Initializing. • **Red Flash every 5 seconds** = Card okay. • **Red Fast Flash** = System shutdown.
Not Used	**11 to 12**	–

Name	Description	SAP Code
IPO IP500 V2 COMB CARD BRI	IPO IP500 V2 COMBINATION CARD BRI	700476021

10.3.5 Unified Communications Module

This card is supported for IP Office Release 8.0 Q1 2012 Service Pack or higher. The card is an embedded server that allows Linux based IP Office applications to be run within the IP Office control unit rather than requiring a separate PC. The IP address of the server is set during its initial configuration and can then be changed through web browser access to the server.

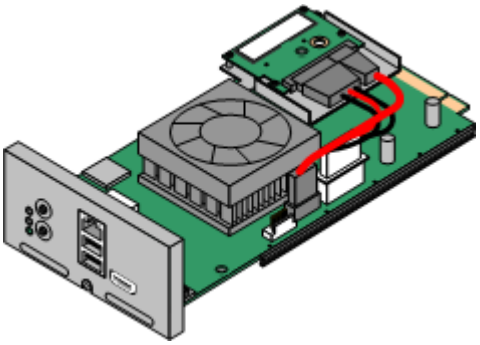

- **Supports**
  Voicemail Pro and or one-X Portal for IP Office applications. The card is not supported by systems running in IP Office Basic Edition mode.
  - **IP Office Users:** Up to 200 users when running Voicemail Pro and one-X Portal for IP Office. More than 200 users when running just Voicemail Pro.
  - **Simultaneous one-X Portal for IP Office Users:** 50.
  - **Maximum voicemail ports:** Up to 20 ports when running Voicemail Pro and one-X Portal for IP Office. Up to 40 ports when running just Voicemail Pro.
  - **Small Community Network:** Maximum 6 systems.
- **Licenses**
  The presence of this module acts as an automatic **Preferred Edition** license for the IP Office system, enabling 4 ports of voicemail. Additional voicemail ports can be licensed. A separate **Essential Edition** license is still required as a pre-requisite.
- **IP500 Control Unit:** ✗
- **IP500 V2 Control Unit:** ✓ IP Office Release 8.0 Q1 2012 Service Pack or higher. Only supported in IP Office Essential Edition, IP Office Preferred Edition and IP Office Advanced Edition modes.
- **Maximum per Control Unit:** 1 per control unit.
- **IP500 Trunk Card Support:** ✗

- **! WARNING: Do Not Remove the Port Cover Except for Maintenance**
  The card is supplied with a removable plastic cover that locates over the external ports (LAN, USB and HDMI) on the faceplate of the card. This cover should always be in place during normal operation of the card. The cover should only be temporarily removed during maintenance actions that require access to the ports and should be replaced when the maintenance is completed.
- **! WARNING: Card Remains Hot After System Shutdown**
  When removing an Unified Communications Module from a system, care should be taken not to touch the heat sink on the module. The heat sink remains hot for a long period after system shutdown.

Ports

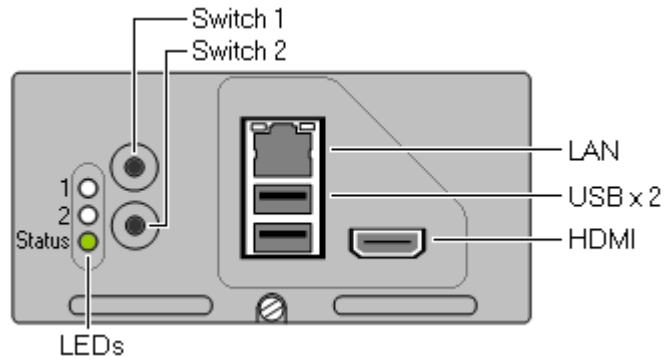

The card is supplied with a removable plastic cover that locates over the external ports (LAN, USB and HDMI) on the faceplate of the card. This cover should always be in place during normal operation of the card. The cover should only be temporarily removed during maintenance actions that require access to the ports and should be replaced when the maintenance is completed. Whilst removed, the following ports are accessible:

- **LAN**
  This port is not used.
- **USB**
  These USB2 ports can be used for the temporary of devices during module maintenance. USB memory keys should be USB 2.0 compatible.
- **HDMI**
  This port can be used for temporary connection of a video monitor during card maintenance.
- **Micro SD**
  This port can be used as the source for files during card maintenance.

LEDs

The Unified Communications Module provides the following LEDs:

- **Upper LEDs 1 & 2: Card Memory Status**
  - **Orange:** Card BIOS starting. If the top button is pressed at this time the card will boot from the alternate source (USB memory key) if possible, ie. a suitable bootable USB device is present.
- **Lower Status LED**
  - **Solid Red:** Unpacking and initializing.
  - **Flashing Red:** Module initialization.
  - **Flashing Green:** Module operating system starting or shutting down.
  - **Solid Green with Amber blink:** OK. IP Office heartbeat okay.
  - **Off with Amber blink:** Card shutdown. IP Office heartbeat okay.
  - If the module is already running when the system restarts, the bottom LED remains green when the LEDs on the other base cards are solid red. If the module is not running when the system restarts, the bottom LED remains extinguished when the LEDs on the other base cards are solid red. The bottom LED on the module then flashes red when the LEDs on the other modules flash red during system initialisation; before reverting to solid green or extinguished when the system reboot is complete.

Buttons

The Unified Communications Module card provides the following buttons:

- **Upper Button/Button 1**
  This switch can be used for the following functions:
  - **Shutdown**
    If the module is running, pressing this switch for more than 2 seconds will start a card shutdown. A completed shutdown is indicated by the lower LED changing to off with amber blinks only.
  - **Startup**
    If the module has been shutdown, pressing this button will cause it to startup.
  - **Alternate Boot**
    When the module is about to boot (both upper LEDs are orange), pressing and holding the switch until the LEDs are off instructs the card to attempt to boot from the USB slots.
- **Switch 2:** Not used.

Name	Description	SAP Code
IPO UC MODULE	IP Office Unified Communications Module	700501442

10.3.6 Digital Station

This card is used to add digital station (DS) extension ports to an IP500 and IP500 V2 control unit. It provides 8 RJ45 DS extension ports for use with Avaya digital phones. A further 4 RJ45 ports are provided for trunk connections when an IP500 trunk card is fitted to this card.

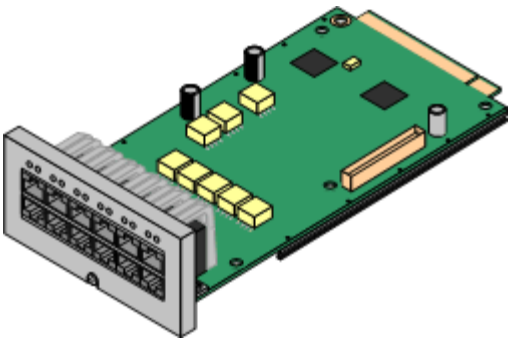

- **Supports**
  Provides 8 DS 395 ports for digital stations 46 (except 3800, 4100, 4400, 7400, M and T-Series).
- **IP500 Control Unit:** ✓
- **IP500 V2 Control Unit:** ✓
- **Maximum per Control Unit:** 3 per control unit.
- **IP500 Trunk Card Support:** ✓ 1.

Port Type	Ports	Features
Digit Station	**1 to 8**	Provides DS 395 ports for digital stations 46 (except 4100, 4400, 7400, M and T-Series). **LEDs** • **Green Flashing** = Phone detected. • **Green On** = Phone active. • LED1 is also used for base card status: • **Red On** = Error • **Red Slow Flash** = Initializing. • **Red Flash every 5 seconds** = Card okay. • **Red Fast Flash** = System shutdown.
Optional Trunk Card Ports	**9 to 12**	The card can be fitted with one trunk daughter card of any type. The trunk daughter card then uses ports 9 to 12 on the base card for its trunk connections. **Port LEDs** LED use depends on the type of daughter card installed on the base card: • LED 9 is also used for daughter card status. • **Red On** = Error • **Red Slow Flash** = Initializing. • **Red Flash every 5 seconds** = Card okay. • **Red Fast Flash** = System shutdown. **Analog Card** • **Green on** = V1: Card installed. V2: Line connected to the port but idle. • **Green flashing** = Line in use. **PRI Card** • **Off** = No trunk present. • **Green on** = Trunk present. • **Green flashing** = Trunk in use. • **Red/Green Fast Flash** (port 9) or **Green Fast Flash** (port 10) = Alarm indication signal (AIS) from the trunk remote end. • **Red with Green Blink** (port 9) or **Green Blink** (port 10) = Port in loopback mode (set through IP Office System Monitor). **BRI Card** • **Off** = No trunk present. • **Green on** = Trunk present. • **Green flashing** = Trunk in use.

Name	Description	SAP Code
IPO 500 Extn Card Dgtl Sta 8	IP Office 500 Extension Card Digital Station 8	700417330
IPO IP500 Extn Card Dgtl Sta 8 TAA	" Trade Agreements Act 426 compliant variant.	700501512

10.3.7 ETR6 Card

This card is used to add 6 ETR phone extension ports to an IP500 V2 control unit. This card is only supported by IP500 V2 systems running in IP Office Basic Edition - PARTNER® Mode or IP Office Basic Edition - Quick Mode (Mu-Law) modes.

It also includes 2 analog extension ports which are for emergency use only when the card is fitted with an analog trunk daughter card. A further 4 RJ45 ports (9 to 12) are provided for trunk connections when an IP500 trunk daughter card is fitted to this card.

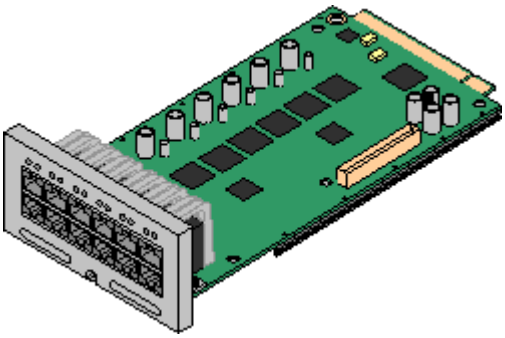

- **Supports**
  ETR and analog phones. Each ETR phone can be used for an ETR or analog phone. Support for ETR 34D phone is limited to a maximum of 2 per ETR6 card and 4 in total.
  - Paging to external paging equipment is not supported via ETR6 ports. It is supported via POT ports.
  - The only analog phones tested by Avaya for IP500/IP500 V2 are the Avaya 6200 Series. If other analog phones are used, it is the customer's own responsibility to ensure that those phones work as required.
- **IP500 Control Unit:** ✗
- **IP500 V2 Control Unit:** ✓
  This card is only supported by IP500 V2 systems running in IP Office Basic Edition - PARTNER® Mode or IP Office Basic Edition - Quick Mode (Mu-Law) modes. The card is not supported in other systems or if the system is changed to A-Law operation.
- **Maximum per Control Unit:** 3.
- **IP500 Trunk Card Support:** ✓ 1.
  The IP500 BRI trunk daughter card is not supported.

Port Type	Ports	Features

ETR Extensions	**1 to 6**	• REN 1.
		• DTMF dialing only.
		• Message waiting indication 51V stepped.
		• ICLID mode Bellcore 202.
		LEDs
		• No status LED are used for ETR ports.
		• LED1 is also used for base card status:
		  • **Red On** = Error
		  • **Red Slow Flash** = Initializing.
		  • **Red Flash every 5 seconds** = Card okay.
		  • **Red Fast Flash** = System shutdown.

EF	**7 to 8**	• If fitted with an IP500 Trunk Daughter card, during power failure both these ports are connected to analog trunk port 12. • Supports ICLID modes DTMFA, DTMFC, DTMFD, FSK and UK20. • REN 2 (1 for external bell device). • Off-Hook current: 25mA • Ring Voltage: 40V. • Intended for connection to two-wire analog phones, the ports do not include a ringing capacitor. For connection to 4-wire analog phones, connection should be via a master socket with ringing capacitors. • No status LEDs are used for analog phone extensions.

Optional Trunk Ports	**9 to 12**	Depends on the type of trunk daughter card fitted. The ETR6 can be fitted with either a Analog Trunk 233 card or PRI Trunk 236 card.
		LEDs
		LED use depends on the type of daughter card installed on the base card:
		• LED 9 is also used for daughter card status.
		  • **Red On** = Error
		  • **Red Slow Flash** = Initializing.
		  • **Red Flash every 5 seconds** = Card okay.
		  • **Red Fast Flash** = System shutdown.
		Analog Card
		  • **Green on** = V1: Card installed. V2: Line connected to the port but idle.
		  • **Green flashing** = Line in use.
		PRI Card
		  • **Off** = No trunk present.
		  • **Green on** = Trunk present.
		  • **Green flashing** = Trunk in use.

		• **Red/Green Fast Flash** (port 9) or **Green Fast Flash** (port 10) = Alarm indication signal (AIS) from the trunk remote end. • **Red with Green Blink** (port 9) or **Green Blink** (port 10) = Port in loopback mode (set through IP Office System Monitor).

Name	Description	SAP Code
IPO IP500 V2 EXTN CARD ETR6	IPO IP500 V2 EXTN CARD ETR6	700476039

10.3.8 Legacy Card Carrier

The IP500 Legacy Card Carrier base card can be used to fit IP Office IP400 cards into the IP500 or IP500 V2 control unit. This can include IP400 trunk and IP400 VCM cards. Up to 2 Legacy Card Carrier cards are supported in a control unit.

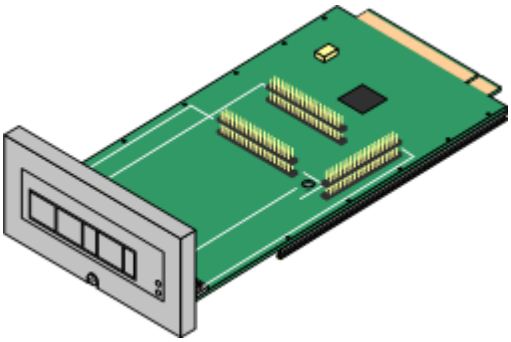

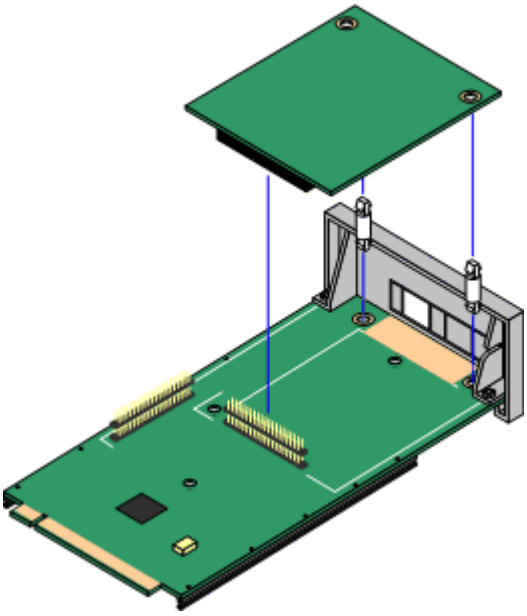

- **Supports**
  The following IP400 cards are supported. Cards not listed are not supported.

✓ PRI T1	✓ PRI 30 E1R2 RJ45	✓ VCM 4
✓ Dual PRI T1	✓ Dual PRI E1R2 RJ45	✓ VCM 8
✓ PRI 30 E1 (1.4)	✓ BRI-8 (UNI)	✓ VCM 16
✓ Dual PRI E1	✓ ANLG 4 Uni (US only)	✓ VCM 24
		✓ VCM 30

  - IP400 PRI trunk cards fitted to IP500/IP500 V2 systems do not require trunk licenses.
- **IP500 Control Unit:** ✓
- **IP500 V2 Control Unit:** ✓
- **Maximum per Control Unit:** 2.
- **IP500 Trunk Card Support:** ✗.

Panels on the front of the carrier card can be snapped off to match the port connects when fitting an IP500 trunk card.

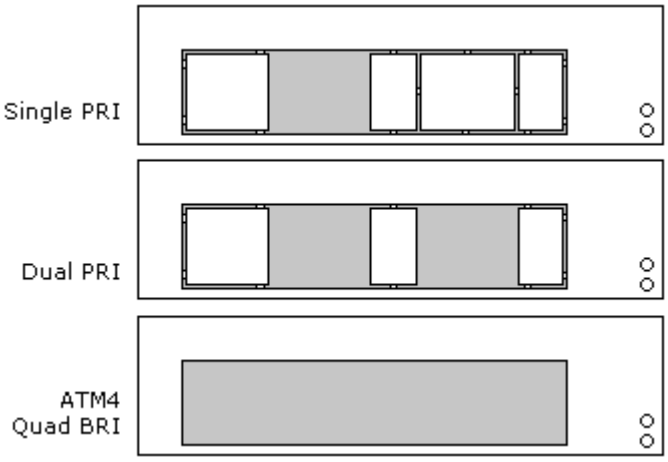

Name	Description	SAP Code
IPO 500 LEGACY CARD CARRIER	IP Office 500 Carrier Card	700417215

10.3.9 TCM8 Digital Station

This card is used to add TCM RJ45 extension ports to an IP500 V2 control unit. It provides 8 RJ45 extension ports for supported M-Series and T-Series digital stations. It can also be used for 4100 and 7400 Series phone support by connection to a Digital Mobility Solution 366 system.

A further 4 RJ45 ports are provided for trunk connections when an IP500 trunk card is fitted to this card.

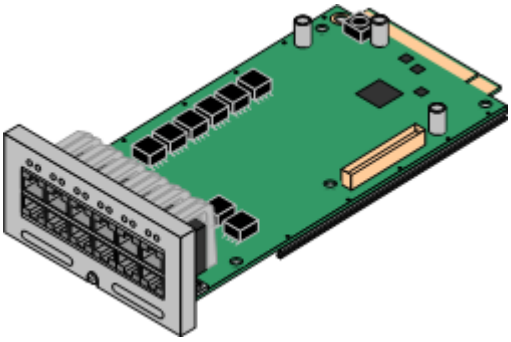

- **Supports**
  Provides 8 TCM ports for supported 4100, 7400, M and T-Series digital stations.
- **IP500 Control Unit:** ✗
- **IP500 V2 Control Unit:** ✓
- **Maximum per Control Unit:** 4.
- **IP500 Trunk Card Support:** ✓ 1.

Port Type	Ports	Features
TCM	**1 to 8**	Cable lengths up to 305 m (1000 ft) using 0.5mm (24AWG) wires do not require a power booster. For TCM phones, lengths up to 790 m (2600 ft) are supported if an auxiliary power supply booster is used. **LEDs** • **Green On** = Phone detected. • LED1 is also used for base card status: • **Red On** = Error • **Red Slow Flash** = Initializing. • **Red Flash every 5 seconds** = Card okay. • **Red Fast Flash** = System shutdown.
Optional Trunk Card Ports	**9 to 12**	The card can be fitted with one trunk daughter card of any type. The trunk daughter card then uses ports 9 to 12 on the base card for its trunk connections. **LEDs** LED use depends on the type of daughter card installed on the base card: • LED 9 is also used for daughter card status. • **Red On** = Error • **Red Slow Flash** = Initializing. • **Red Flash every 5 seconds** = Card okay. • **Red Fast Flash** = System shutdown. **Analog Card** • **Green on** = V1: Card installed. V2: Line connected to the port but idle. • **Green flashing** = Line in use. **PRI Card** • **Off** = No trunk present. • **Green on** = Trunk present. • **Green flashing** = Trunk in use. • **Red/Green Fast Flash** (port 9) or **Green Fast Flash** (port 10) = Alarm indication signal (AIS) from the trunk remote end. • **Red with Green Blink** (port 9) or **Green Blink** (port 10) = Port in loopback mode (set through IP Office System Monitor). **BRI Card** • **Off** = No trunk present. • **Green on** = Trunk present. • **Green flashing** = Trunk in use.

Name	Description	SAP Code
IPO 500 TCM 8 Extn Card Assy	IP Office 500 TCM 8	700500758

10.3.10 VCM

This type of card is used to add voice compression channels to an IP500 and IP500 V2 control unit. Those channels are used for VoIP calls including IP extensions and or IP trunks.

IP500 control units support up to 128 voice compression channels, using IP500 VCM cards and/or IP400 VCM cards 259 on an IP500 carrier card 228. The IP500 V2 control unit supports up to 148 voice compression channels, using the same cards plus voice compression ports on IP500 Combination Cards 220.

The cards are available in 32 channel and 64 channel variants. All the card variants have 4 RJ45 ports which are used for trunk connections when an IP500 trunk daughter card 232 is fitted.

- **Avaya IP Endpoint License Support**
  For systems running IP Office Release 6.0 or higher, each IP500 VCM 32 or IP500 VCM 64 card installed in the system enables 12 Avaya IP telephones without requiring any specific **Avaya IP Endpoint** licenses being added to the system configuration. This does not apply for IP500 VCM 32 V2 and IP500 VCM 64 V2 cards or for IP500 Combination cards. For further details refer to Telephone/Endpoint Licenses 409.

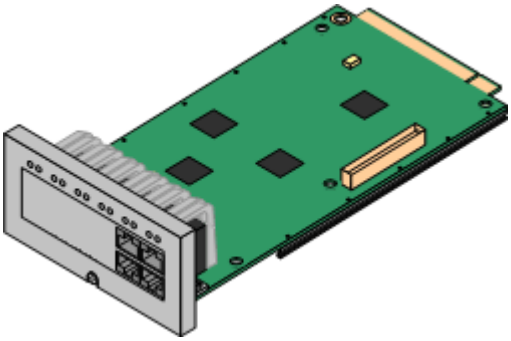

- **Supports**
  Codecs G.711, G.729a and G.723 with 64ms echo cancellation. The maximum number of simultaneous channels useable on an IP500 VCM base card is affected by the codec being used. The following table assumes that all calls using the VCM use the same codec.
  - G.722 is supported by IP Office Release 8.0 and higher in systems with an IP500 VCM card or an IP500 Combination card. It is not supported if the system contains any IP400 VCM cards.

Codec	IP500 VCM 32 IP500 VCM 32 V2	IP500 VCM 64 IP500 VCM 64 V2
G.711	32	64
G.729a	30	60
G.723	22	44
G.722	30	60

- **IP500 Control Unit:** ✓
- **IP500 V2 Control Unit:** ✓
- **Maximum per Control Unit:** 2.
- **IP500 Trunk Card Support:** ✓ 1.

Port Type	Ports	Features
Not present	**1 to 8**	Not present. **LEDs** • LEDs 1 to 8 are unlabelled. They are used to indicate voice compression channel usage. Each LED lit represents 12.5% of the available voice compression channel capacity in use (total card capacity rather than licensed capacity). • LED1 is also used for base card status: • **Red On** = Error • **Red Flash every 5 seconds** = Card okay. • **Red Slow Flash** = Initializing. • **Red Fast Flash** = System shutdown.
Optional Trunk Card Ports	**9 to 12**	The card can be fitted with one trunk daughter card of any type. The trunk daughter card then uses ports 9 to 12 on the base card for its trunk connections. **LEDs** LED use depends on the type of daughter card installed on the base card: • LED 9 is also used for daughter card status. • **Red On** = Error • **Red Flash every 5 seconds** = Card okay. • **Red Slow Flash** = Initializing. • **Red Fast Flash** = System shutdown. **Analog Card** • **Green on** = V1: Card installed. V2: Line connected to the port but idle. • **Green flashing** = Line in use. **PRI Card** • **Off** = No trunk present. • **Green on** = Trunk present. • **Green flashing** = Trunk in use. • **Red/Green Fast Flash** (port 9) or **Green Fast Flash** (port 10) = Alarm indication signal (AIS) from the trunk remote end. • **Red with Green Blink** (port 9) or **Green Blink** (port 10) = Port in loopback mode (set through IP Office System Monitor). **BRI Card** • **Off** = No trunk present. • **Green on** = Trunk present. • **Green flashing** = Trunk in use.

	Name	Description	SAP Code
IP500 Voice Compression Modules	**IPO IP500 MC VCM 32**	IP Office 500 Media Card Voice Coding Module 32	700417389
	IPO IP500 VCM 32 TAA	" Trade Agreements Act 426 compliant variant.	700501518
	IPO IP500 MC VCM 64	IP Office 500 Media Card Voice Coding Module 64	700417397
IP500 Voice Compression Modules V2	**IPO IP500 MC VCM 32 V2**	IP500 Media Card Voice Coding Module 32 V2	700504031
	IPO IP500 VCM 32 TAA V2	" Trade Agreements Act 426 compliant variant.	700504033
	IPO IP500 MC VCM 64 V2	IP500 Media Card Voice Coding Module 64 V2	700504032

10.4 IP500 Trunk Daughter Cards

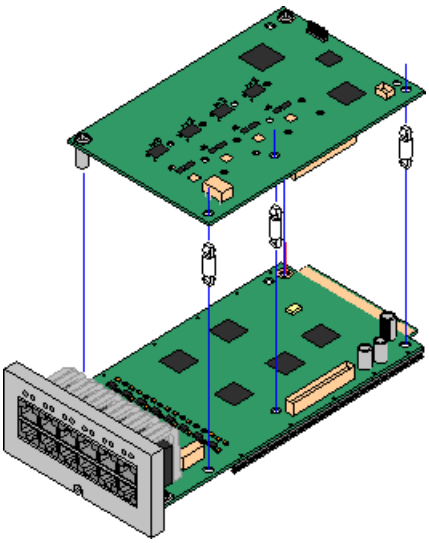

Most IP500 base cards 23 can be fitted with an IP500 trunk daughter cards to support the connection of trunks to the base card.

Each daughter card is supplied with the stand off pillars required for installation and a label to identify the daughter cards presence on the front of the base card after installation.

- IP500 Combination cards are pre-fitted with a trunk daughter card which cannot be removed or changed for another type of trunk daughter card.

IP500 Analog Trunk Card/IP500 Analog Trunk Card V2 233

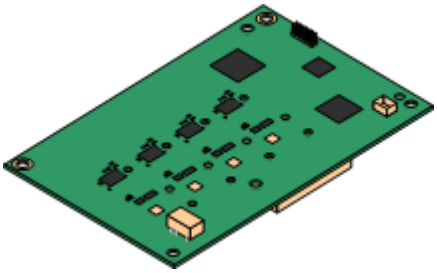

These cards allow the base card to support 4 analog loop-start trunks.

- The analog phone ports do not include a ringing capacitor. Where this is a requirement, connection should be via a Master socket containing ringing capacitors.
- If fitted with an IP500 Analog Trunk daughter card, during power failure phone port 8 is connected to analog trunk port 12.

- **Maximum:** 4 per control unit. The IP500 Analog Trunk Card V2 is only supported in the IP500 V2.

IP500 PRI-U Trunk Card 236

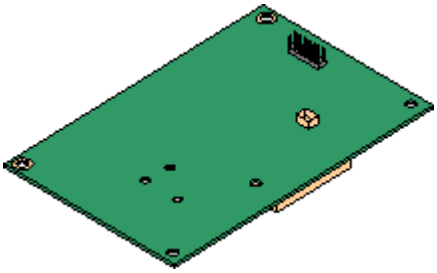

This card allows the base card to support up to 2 PRI trunk connections. The card is available in single and dual port variants. The card can be configured for E1 PRI, T1 robbed bit, T1 PRI or E1R2 PRI trunks.

- **Maximum:** 4 per control unit.
- The IP Office system supports 8 unlicensed B-channels on each IP500 PRI-U port fitted. Additional B-channels, up to the capacity of ports installed and PRI mode selected require **IP500 Universal PRI (Additional Channels)** 408 licenses added to the configuration. These additional channels consume the licenses based on which additional channels are configured as in-service from port 9 of slot 1 upwards. D-channels are not affected by licensing.

IP500 BRI Trunk Card 235

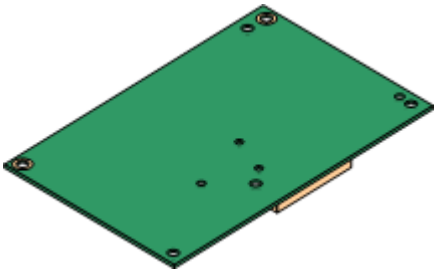

This card allows the base card to support up to 4 BRI trunk connections, each trunk providing 2B+D digital channels. The card is available in 2 port (4 channels) and 4 port (8 channels) variants.

- **Maximum:** 4 per control unit.
- **S-Bus Connection**: The card can be switched from To trunk mode to So mode. This mode requires additional terminating resistors and an ISDN crossover cable connection, see BRI Port (So) 393.
  - IP Office Basic Edition - Norstar Mode and IP Office Basic Edition - Quick Mode systems are limited to a maximum of 12 BRI channels using BRI Combination and or BRI trunk daughter cards.

10.4.1 Analog Trunk Card

These cards can be added to an IP500 base card to provide that card with support for 4 loop-start analog trunks. The newer IP500 Analog Trunk Card V2 version is supported by IP500 V2 systems running IP Office Release 8.1 Feature Pack 1 or higher only.

This card can be fitted to any IP500 base card except the IP500 Legacy Carrier card and IP500 4-Port Expansion card.

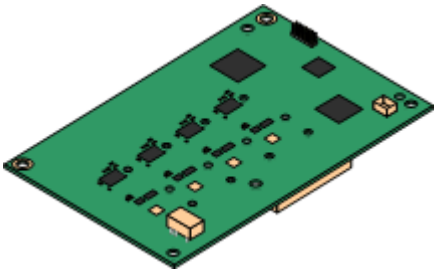

- **IP500 Control Unit - V1:** ✓, **V2:** ✗
- **IP500 V2 Control Unit - V1:** ✓, **V2:** ✓
- **Ports/Channels**
  4 Loop-start analog trunk ports. Connections via the host IP500 base card.
- DTMF, ICLID and busy tone detection.
- Over-voltage/lightning protection (may still require additional protection equipment 42).
- DTMF and LD (loop disconnect) dialing.
- Echo cancellation.
- **Echo Cancellation**
  The card supported echo cancellation that varies depending on the card type.
  - **V1:** Echo cancellation manually selectable to either ***8***, ***16***, ***32***, ***64*** or ***128*** milliseconds or ***Off***. The default is 16 milliseconds.
  - **V2:** Echo cancellation manually selectable to either ***On*** or ***Off***. The default is ***On***. The IP500 Analog Trunk Card V2 also supports echo reduction which is set to ***On*** by default.
- **Service Status/Line Status Indication**
  - **V1:** Detection of individual line status for idle lines is not supported. Therefore the card LEDs and System Status Application simply indicate that the card is installed and when the line is in use.
  - **V2:** Automatic detection of line status for idle lines is supported. The card LEDs and System Status Application indicate that the individual line is connected and idle or is in use.
- **Impedance Matching**
  - **V1:** For this card only manual impedance matching is useable and only in selected locales.
  - **V2:** This card supports automatic impedance matching at system startup and this mode is enabled by default. Manual or no impedance matching can be used if required. Impedance matching is supported in all locales.
- **Power Failure Port**
  Regardless of the IP500 card hosting it, during power failure pins 4 and 5 of port 12 are connected to pins 7 and 8. In addition, when fitted to an IP500 Analog Phone 8 base card, during power failure extension port 8 is connected to the analog trunk port 12.
- **License:** No license required.
- **Maximum per Control Unit:** 4.
- **IP Office Software Level:**
  This depends on the version of the card as follow:
  - **V1:** 4.0+. IP500 and IP500 V2.
    New build PCS10 and higher cards are only supported in systems running IP Office Release 6.1(20), 7.0(12) or 8.0 and higher. Refer to IP Office Technical Tip 237.
  - **V2:** 8.1 Feature Pack 1+, IP500 V2 only.

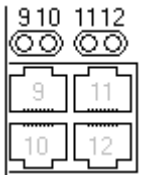

Daughter Card Ports (9-12)
The LEDs for ports 9 to 12 of the IP500 base card are used as follows:

- **Green on** = V1: Card installed. V2: Line connected to the port but idle.
- **Green flashing** = Line in use.
- LED 9 is also used for daughter card status.
  - **Red On** = Error
  - **Red Slow Flash** = Initializing.
  - **Red Flash every 5 seconds** = Card okay.
  - **Red Fast Flash** = System shutdown.

Name	Description	SAP Code
IPO 500 Trnk Anlg 4 Uni	IP Office 500 Trunk Card Analog 4 Universal	700417405
IPO IP500 Trunk Card Anlg 4 V2	IP Office 500 Trunk Card Analog 4 Universal V2	700503164

10.4.2 BRI Trunk Cards

This card can be added to an IP500 base card to provide that card with support for BRI-To 394 trunks. The card is available in 8 channel (4 physical trunks) or 4 channel (2 physical trunks) variants.

This card can be fitted to any IP500 base card except the IP500 Legacy Carrier card and IP500 4-Port Expansion card.

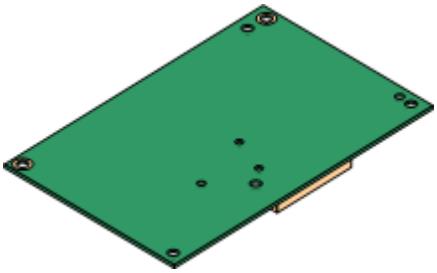

- **IP500 Control Unit:** ✓
- **IP500 V2 Control Unit:** ✓
- **Ports/Channels**
  2 or 4 BRI trunk ports. Connections via ports 9 to 12 of the host IP500 base card.
  - Each trunk port supports 2B+D channels.
  - ETSI or AusTS013 basic rate protocol set through the IP Office configuration.
- **License:** No license required.
- **Maximum per Control Unit:** 4.
  - IP Office Basic Edition - Norstar Mode and IP Office Basic Edition - Quick Mode systems are limited to a maximum of 12 BRI channels using BRI Combination and or BRI trunk daughter cards.
- **IP Office Software Level:** 4.0+.
- **S-Bus Connection:** On IP Office 4.2+ systems, the card can be switched from To 394 trunk mode to So 393 mode. This mode requires additional terminating resistors and an ISDN crossover cable connection, see BRI Port (So) 393.
- This card is approved for use in the following countries:

Brazil.	New Zealand.
China.	Russia.
India.	South Africa.
Argentina.	United Arab Emirates (UAE).
Australia.	European Union (EU).

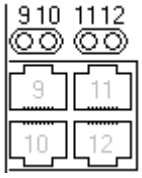

Daughter Card Ports (9-12)
The LEDs for ports 9 to 12 of the IP500 base card are used as follows:

- **Off** = No trunk present.
- **Green on** = Trunk present.
- **Green flashing** = Trunk in use.

- LED 9 is also used for daughter card status.
  - **Red On** = Error
  - **Red Slow Flash** = Initializing.
  - **Red Flash every 5 seconds** = Card okay.
  - **Red Fast Flash** = System shutdown.

Name	Description	SAP Code
IPO 500 Trnk BRI 4 Uni	IP Office 500 Trunk Card Basic Rate 4 Universal	700417413
IPO IP500 TRNK BRI 4 UNI TAA	" Trade Agreements Act 426 compliant variant.	700501515
IPO 500 Trnk BRI 8 Uni	IP Office 500 Trunk Card Basic Rate 8 Universal	700417421
IP0 IP500 BRI S0 CONVTR CBL	IP500 BRI So Converter Cable	700458649

10.4.3 PRI Trunk Cards

This card can be added to an IP500 base card to provide that card with support for PRI trunks. The card is available in single port or dual port variants.

This card can be fitted to any IP500 base card except the IP500 Legacy Carrier card and IP500 4-Port Expansion card.

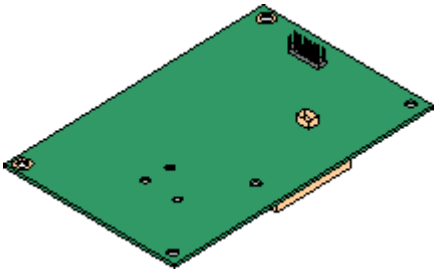

- **IP500 Control Unit:** ✓
- **IP500 V2 Control Unit:** ✓
- **Ports/Channels**
  1 or 2 PRI trunk ports 403. Each port supports the following PRI line types. On dual port cards, both ports will be the same line type. The line type selection can be changed using IP Office Manager. The options available depend on the IP Office operation mode and locale.
  - E1 PRI (30B+D channels per port).
  - E1R2 PRI (30B channels per port).
  - T1 robbed bit (24B channels per port) or T1 PRI (23B+D channels per port).
  - The required mode can be selected within IP Office Manager by right-clicking on the line icon and selecting **Change Universal PRI Card Line Type** and then selecting the required line type.
  - Physical trunk connection is via ports 9 and 10 of the host IP500 base card.
  - Port 11 and 12 can be used as test points for connection of test and monitoring equipment for the adjacent port.
- **Licenses**
  The IP Office system supports 8 unlicensed B-channels on each IP500 PRI-U port fitted. Additional B-channels, up to the capacity of ports installed and PRI mode selected require **IP500 Universal PRI (Additional Channels)** licenses added to the configuration. These additional channels consume the licenses based on which additional channels are configured as in-service from port 9 of slot 1 upwards. D-channels are not affected by licensing.
- **Maximum per Control Unit:** 4 per control unit in IP Office Essential Edition. 1 single port card only in other modes.
- **Software Level:** 4.1+.

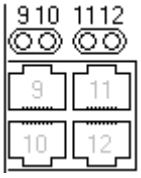

Daughter Card Ports (9-12)
The LEDs for ports 9 to 12 of the IP500 base card are used as follows:

- **Off** = No trunk present.
- **Green on** = Trunk present.
- **Green flashing** = Trunk in use.
- **Red/Green Fast Flash** (port 9) or **Green Fast Flash** (port 10) = Alarm indication signal (AIS) from the trunk remote end.
- **Red with Green Blink** (port 9) or **Green Blink** (port 10) = Port in loopback mode (set through IP Office System Monitor).

- LED 9 is also used for daughter card status.
  - **Red On** = Error
  - **Red Slow Flash** = Initializing.
  - **Red Flash every 5 seconds** = Card okay.
  - **Red Fast Flash** = System shutdown.

Name	Description	SAP Code
IPO 500 TRNK PRI UNVRSL SNGL	IP Office 500 Trunk Card Primary Rate 1 Universal	700417439
IPO IP500 TRNK PRI UNVRSL SNGL TAA	" Trade Agreements Act 426 compliant variant.	700501514
IPO 500 TRNK PRI UNIVRSL DUAL	IP Office 500 Trunk Card Primary Rate 2 Universal	700417462
IPO IP500 TRNK PRI UNVSL DUAL TAA	" Trade Agreements Act 426 compliant variant.	700501517

10.5 IP500 Expansion Modules

The following IP500 external expansion modules are supported by IP Office Release 8.1. Each module uses an external power supply unit 36 supplied with the module. A locale specific power cord 37 for the PSU must be ordered separately.

The external module can be stacked on top of the control unit. They can also be wall or rack mounted using one of the IP Office mounting kits 274.

- Systems running in IP Office Basic Edition - PARTNER® Mode, IP Office Basic Edition - Norstar Mode or IP Office Basic Edition - Quick Mode support up to 8 external expansion modules so long as the system extensions limit is not exceeded.
- Systems running in IP Office Essential Edition support 8 external expansion modules or 12 if the control unit is fitted with an IP500 4-Port Expansion Base Card.

- **IP500 Digital Station Module** 243
  Provides, depending on variant, an additional 16 or 30 DS 395 ports for supported Avaya DS digital phones 46.

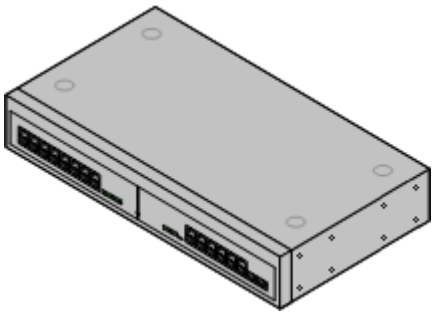

- **IP500 Digital Station A Module** 245
  Provides, depending on variant, an additional 16 or 30 TCM ports for supported Avaya TCM digital phones 46. Supported by IP500 V2 only.

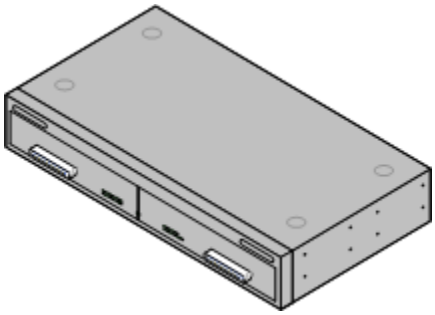

- **IP500 Phone Module** 248
  Provides, depending on variant, an additional 16 or 30 PHONE 401 ports for analog phones.

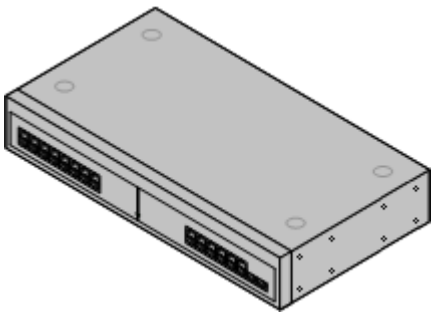

- **IP500 BRI So8 Module** 241
  Provides 8 ETSI BRI-So ports 393 for the connection of ISDN devices. This unit is not intended to support BRI trunks.

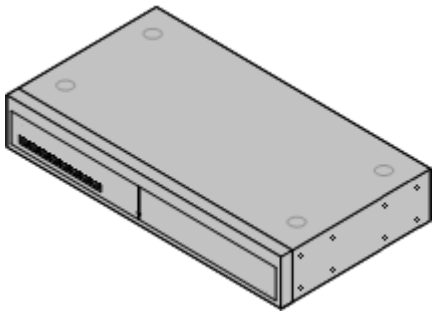

- **IP500 Analog Trunk Module** 239
  Provides an additional 16 ANALOG 392 ports for connection of analog trunks. Supports both loop-start and ground-start trunks.
  - Use with ground start trunks requires that the trunk module and the IP Office control unit are grounded.
  - In IP Office Basic Edition - PARTNER® Mode, IP Office Basic Edition - Norstar Mode and IP Office Basic Edition - Quick Modes, only 1 Analog Trunk module is supported.

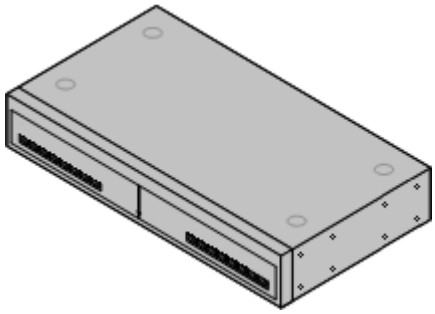

10.5.1 Analog Trunk 16

The IP500 Analog Trunk module can be used to add 16 additional analog trunks to an IP Office system. The module supports both loop-start and, with suitable grounding, ground-start trunks.

- In IP Office Basic Edition - PARTNER® Mode, IP Office Basic Edition - Norstar Mode and IP Office Basic Edition - Quick Modes, only 1 Analog Trunk module is supported.
- **WARNING**
  In all IP Office installations, any module being used for analog trunk connections must be connected to a functional earth 41.
- **WARNING**
  Within areas of high lightning risk, any module using analog trunk connections must be connected to a protective ground 41 and to surge protection equipment 42 (an Avaya 146G Surge Protector).

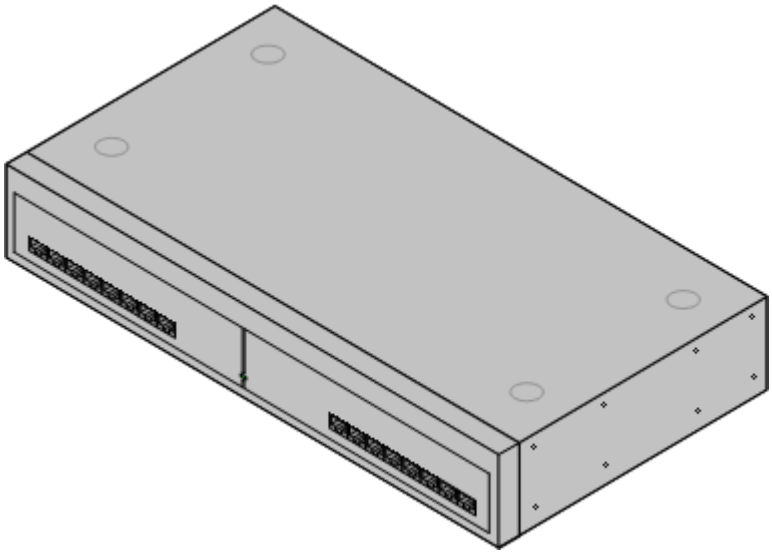

Feature	Details
Supported on	IP500 and IP500 V2.
Locales	This module is currently only supported in North American locales.
Software Level	IP Office core software level 1.0 minimum. Bin file = naatm16.bin.
Included	Power supply unit (see below) and Expansion Interconnect cable.
Power Supply	The module is supplied with a 2-pin, 40W external power supply unit. The PSU has an integral power cord for connection to the module's DC I/P socket. A locale specific IEC60320 C7 power cord 36 for the external PSU is required but is not supplied with the module.
Mounting	The module is designed as a free-standing module that can be stacked on or under other IP Office modules. The module can be rack or wall mounted using the IPO IP500 RACK MNTG KIT V3 274.
Dimensions	Width: 445mm/17.5". Depth: 245mm/9.7". Height: 71mm/2.8"/2U.
Weight	Unboxed: 2.9Kg/6.6lbs. Boxed: 4.2Kg/9.4lbs.

Module Front

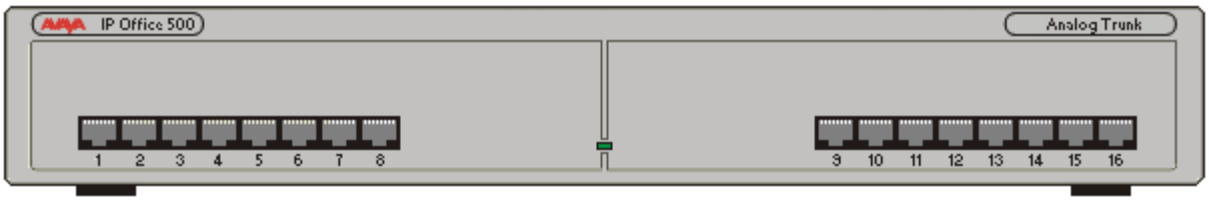

Port LEDs	None
Module Center LED	The center LED on all external expansion modules is used to indicate the overall state of the module as follows: • **Red flashing** = Module starting up/Loading firmware. • **Red on** = Error. • **Green on** = Module okay.

Module Rear

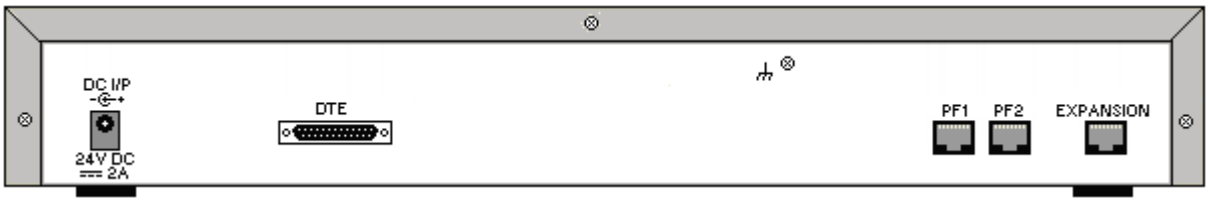

Ports	Description
ANALOG 392	RJ45 socket. Used for connection to analog trunks. Ports can be configured as either loop-start or ground-start trunks through the IP Office configuration. In the event of power failure, Analog ports 1 and 2 are directly connected to analog extension ports PF1 and PF2 respectively. If used the connected phones must be clearly labeled as power failure devices. This is only supported for loop-start analog trunks.
DC I/P 395	DC power input port. Used for connection of the power lead from an Avaya 40W external power supply unit supplied with the expansion module. A locale specific IEC60320 C7 power cord 36 for the external PSU is required but is not supplied with the module.
DTE 155	25-Way D-Type socket. For Avaya use only.
EXPANSION 398	RJ45 Socket. Used for direct connection to an Expansion port on an IP Office control unit using the Expansion Interconnect cable supplied with the module.
PF 400	RJ45 socket. Power failure analog extension ports. See Analog section above.
⏚	Ground point. Used for connection of a functional earth 41 if required. On older modules where this screw is not present, the top-center cover screw should be used instead. • IMPORTANT In all IP Office installations, any module being used for analog trunk connections must be connected to a functional earth 41. • ⚠ WARNING Within areas of high lightning risk, any module using analog trunk connections must be connected to a protective ground 41 and to surge protection equipment 42.

Part Codes and Related Equipment

All expansion modules are supplied with a base software level and should be upgraded to match the core software of the control unit in the IP Office system. Expansion modules include an external power supply unit (PSU) and an appropriate interconnect cable. They do not include a locale specific power cord for the external PSU or any phone extension cables.

Item	Variant	Country	SAP Code
IPO IP500 EXP MOD ANLG TRNK 16	**America**	America	700449473
IPO IP500 EXP MOD ANLG TRNK 16 TAA	" Trade Agreements Act 426 compliant variant.	America	700501511
IEC60320 C7 Power Cord 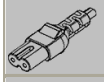	**NEMA1-15**	America	700213390
Mounting Kit 202	**IPO IP500 RACK MNTG KIT V3**	All	700503160

10.5.2 BRI So8

The So8 module can be used to add ETSI BRI S0-interface ports to the IP Office system. These ports can then be used for the connection of ISDN devices.

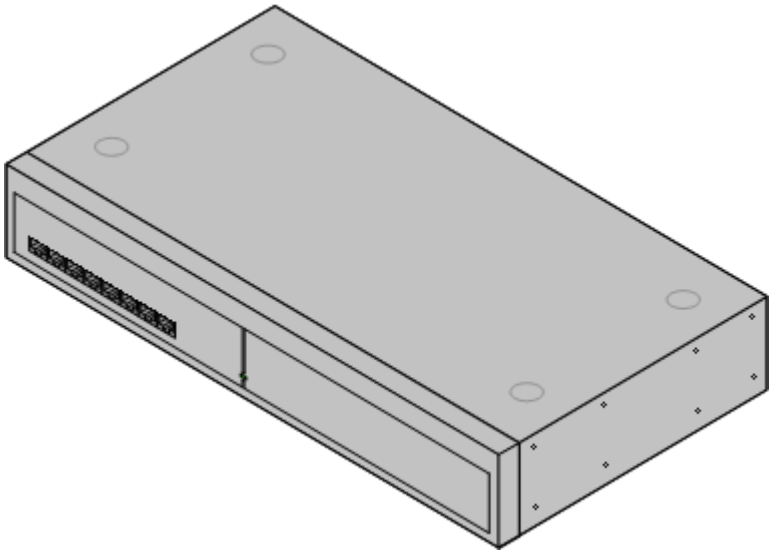

Feature	Details
Supported on	IP500 and IP500 V2. The control unit must be running in IP Office Essential Edition. This module is not supported in IP Office Basic Edition - PARTNER® Mode, IP Office Basic Edition - Norstar Mode or IP Office Basic Edition - Quick Modes.
Locales	Supported in all IP Office locales 51.
Software Level	IP Office core software level 1.0 minimum. Bin file = nas0-16.bin.
Included	Power supply unit (see below) and Expansion Interconnect cable.
Power Supply	The unit is supplied with an earthed 3-Pin, 60W external power supply unit. The PSU has an integral power cord for connection to the unit's DC I/P socket. A locale specific IEC60320 C13 power cord 36 for the external PSU is required but is not supplied with the unit.
Mounting	The module is designed as a free-standing module that can be stacked on or under other IP Office modules. The module can be rack or wall mounted using the IPO IP500 RACK MNTG KIT V3 274.
Dimensions	Width: 445mm/17.5". Depth: 245mm/9.7". Height: 71mm/2.8"/2U.
Weight	Unboxed: 2.8Kg/6.3lbs. Boxed: 4.1Kg/9.2lbs.

Module Front

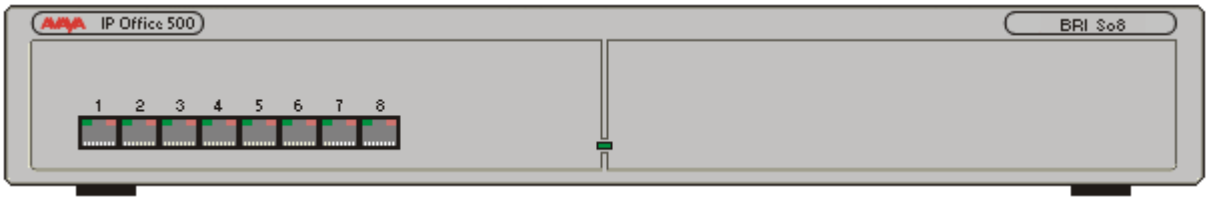

Port LEDs	• **Green On** = Connected. • **Green Flashing** = Activity.
Module Center LED	The center LED on all external expansion modules is used to indicate the overall state of the module as follows: • **Red flashing** = Module starting up/Loading firmware. • **Red on** = Error. • **Green on** = Module okay.

Module Rear

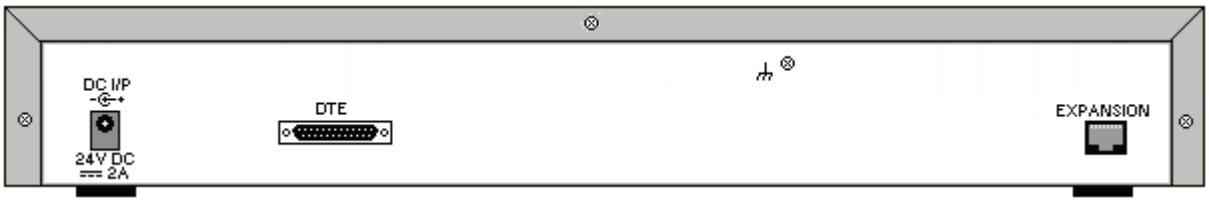

Ports	Description
BRI 393	RJ45 socket. Used for connection of ISDN terminal devices. Note: These ports appear a lines within the IP Office configuration. However they cannot be used for connection to external BRI lines.
DC I/P 395	DC power input port. Used for connection of the power lead from an Avaya 60W external power supply unit supplied with the expansion module. A locale specific IEC60320 C13 power cord 36 for the external PSU is required but is not supplied with the module.
DTE 155	25-Way D-Type socket. For Avaya use only.
EXPANSION 398	RJ45 Socket. Used for direct connection to an Expansion port on an IP Office control unit using the Expansion Interconnect cable supplied with the module.
⏚	Function ground point. Used for connection of a protective or functional 41 ground if required. On older modules where this screw is not present, the top-center cover screw should be used instead.

Part Codes and Related Equipment

All expansion modules are supplied with a base software level and should be upgraded to match the core software of the control unit in the IP Office system. Expansion modules include an external power supply unit (PSU) and an appropriate interconnect cable. They do not include a locale specific power cord for the external PSU or any phone extension cables.

Item	Variant	Country	SAP Code
IPO 500 BRI So8		All	700449515
IEC60320 C13 Power Cord 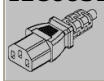	**CEE7/7**	Europe	700289762
	BS1363	United Kingdom	700289747
	NEMA5-15P	America	700289770
Mounting Kit 202	**IPO IP500 RACK MNTG KIT V3**	All	700503160

10.5.3 Digital Station 16/30

IP Office 500 Digital Station modules can be used to add additional DS ports 395 to an IP Office system. The module is available in 16 and 30 port variants, referred to as the IP500 Digital Station 16 and IP500 Digital Station 30 respectively. For phones requiring a TCM port, for example M-Series and T-Series phones, use IP500 Digital Station 16A and 30A modules 245.

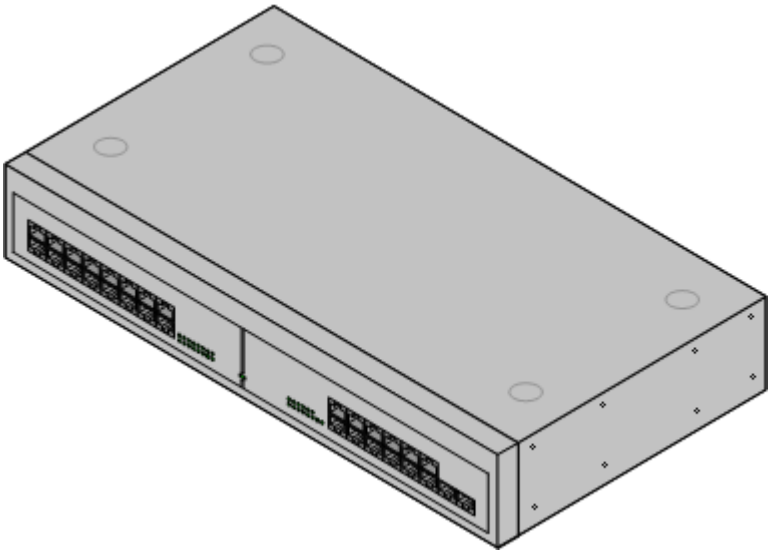

Feature	Details
Supported on	IP500 and IP500 V2.
Locales	Supported in all IP Office locales 51.
Software Level	IP Office core software level 2.1(31) minimum. Bin file = nadcpV2.bin.
Included	Power supply unit (see below) and Expansion Interconnect cable.
Power Supply	The module is supplied with a Earthed 3-Pin, 60W external power supply module. The PSU has an integral power cord for connection to the module's DC I/P socket. A locale specific IEC60320 C13 power cord 36 for the external PSU is required but is not supplied with the module.
Mounting	The module is designed as a free-standing module that can be stacked on or under other IP Office modules. The module can be rack or wall mounted using the IPO IP500 RACK MNTG KIT V3 274.
Dimensions	Width: 445mm/17.5". Depth: 245mm/9.7". Height: 71mm/2.8".
Weight	Unboxed: 3.5Kg/7.8lbs. Boxed: 4.8Kg/10.8lbs. (Based on DS30)

Module Front

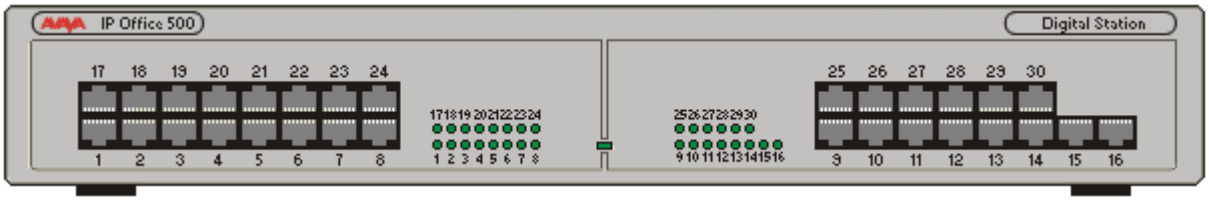

Port LEDs	• **Green Flashing** = Phone detected. • **Green On** = Phone active.
Module Center LED	The center LED on all external expansion modules is used to indicate the overall state of the module as follows: • **Red flashing** = Module starting up/Loading firmware. • **Red on** = Error. • **Green on** = Module okay.

Module Rear

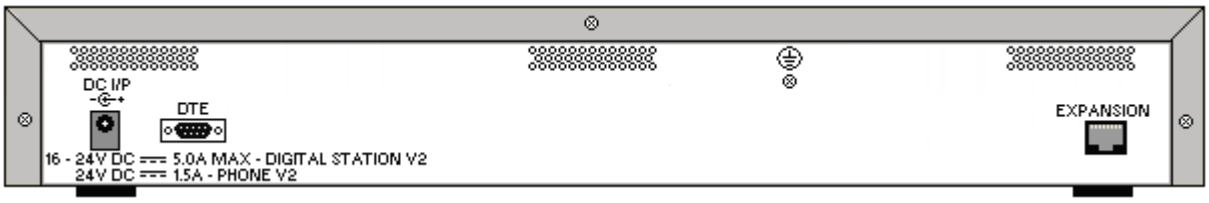

Port	Description
DC I/P 395	DC power input port. Used for connection of the power lead from an Avaya earthed 60W external power supply unit supplied with the expansion module. A locale specific IEC60320 C13 power cord 36 for the external PSU is required but is not supplied with the module.
DS 395	RJ45 socket. Digital Station port. Used for connection of IP Office supported DS phones 46. If connected to an out-of-building extension 42, the connection must be made via additional IROB barrier devices in addition to the buildings primary protection. The module must also be connected to a protective ground.
DTE 155	9-Way D-Type socket. For Avaya use only.
EXPANSION 398	RJ45 Socket. Used for direct connection to an Expansion port on an IP Office control unit using the Expansion Interconnect cable supplied with the module.
⏚	Protective Ground point. Use of a protective ground is required for all installations, see Grounding (Earthing) 96. Where the module is connected to analog extensions in another building, an IP Office Phone Barrier Box V2 (101V) is required at both ends, see Lightning Protection/Out-of-Building Connections 42.

Part Codes and Related Equipment

All expansion modules are supplied with a base software level and should be upgraded to match the core software of the control unit in the IP Office system. Expansion modules include an external power supply unit (PSU) and an appropriate interconnect cable. They do not include a locale specific power cord for the external PSU or any phone extension cables.

Item	Variant	Country	SAP Code
IPO IP500 EXP MOD DGTL STA 16	**16 Ports**	All	700449499
IPO IP500 EXP MOD DGTL STA 16 TAA	" Trade Agreements Act 426 compliant variant.		–
IPO IP500 EXP MOD DGTL STA 30	**30 Ports**		700426216
IEC60320 C13 Power Cord 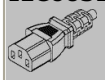	**CEE7/7**	Europe	700289762
	BS1363	United Kingdom	700289747
	NEMA5-15P	America	700289770
Mounting Kit 202	**IPO IP500 RACK MNTG KIT V3**	All	700503160

10.5.4 Digital Station 16A/30A

These modules can be used to add additional ports for Avaya digital (non-IP) extensions for TCM phones, for example M-Series and T-Series phones. The module is available in 16 and 30 port variants, referred to as the IP500 Digital Station 16A and IP500 Digital Station 30A respectively. For phones requiring DS ports, for example 1400 Series and 9500 Series phones, see the Digital Station 16 and 30 modules 243.

The modules are available with RJ21 connectors (1 on the 16 port version, 2 on the 30 port version).

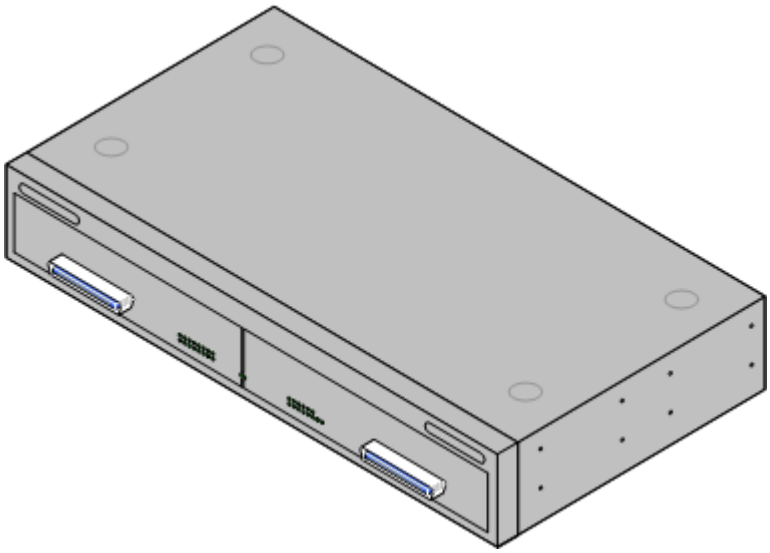

Feature	Details
Supported on	IP500 V2 only.
Locales	Supported in all IP Office locales 51.
Software Level	IP Office Release 7.0 minimum (TCM only). Bin file = nadcpaV1.bin.
Included	Power supply unit (see below) and Expansion Interconnect cable.
Power Supply	The module is supplied with a Earthed 3-Pin, 60W external power supply module. The PSU has an integral power cord for connection to the module's DC I/P socket. A locale specific IEC60320 C13 power cord 36 for the external PSU is required but is not supplied with the module.
Mounting	The module is designed as a free-standing module that can be stacked on or under other IP Office modules. The module can be rack or wall mounted using the IPO IP500 RACK MNTG KIT V3 274.
Dimensions	Width: 445mm/17.5". Depth: 245mm/9.7". Height: 71mm/2.8".
Weight	Unboxed: 3.5Kg/7.8lbs. Boxed: 4.8Kg/10.8lbs. (Based on DS30A RJ21)

Module Front

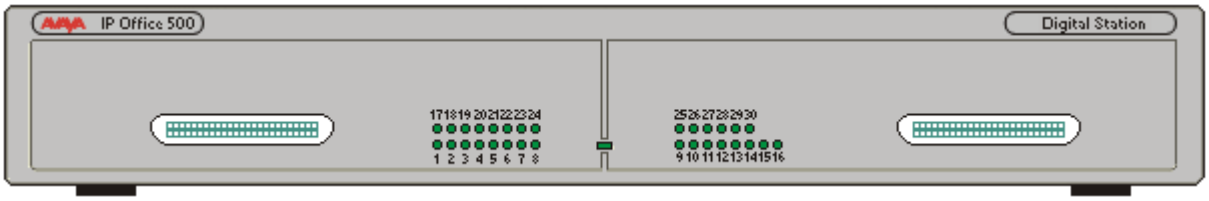

Port LEDs	• **Green On** = Phone detected.
Module Center LED	The center LED on all external expansion modules is used to indicate the overall state of the module as follows: • **Red flashing** = Module starting up/Loading firmware. • **Red on** = Error. • **Green on** = Module okay. • **Green flashing** = Module starting up/Loading firmware (IP500 DS16A/30A module only).

Module Rear

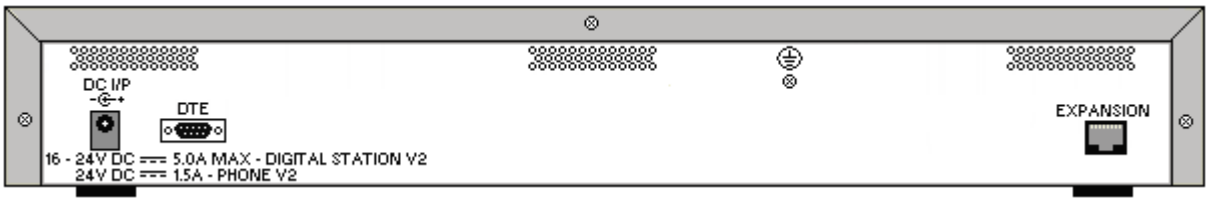

Ports	Description
DC I/P 395	DC power input port. Used for connection of the power lead from an Avaya earthed 60W external power supply unit supplied with the expansion module. A locale specific IEC60320 C13 power cord 36 for the external PSU is required but is not supplied with the module.
RJ21 404	For IP Office Release 7.0, the modules support just phones requiring TCM ports 404.
DTE 155	9-Way D-Type socket. For Avaya use only.
EXPANSION 398	RJ45 Socket. Used for direct connection to an Expansion port on an IP Office control unit using the Expansion Interconnect cable supplied with the module.
⏚	Protective Ground point. Use of a protective ground is required for all installations, see Grounding (Earthing) 96. Where the module is connected to analog extensions in another building, an IP Office Phone Barrier Box V2 (101V) is required at both ends, see Lightning Protection/Out-of-Building Connections 42.

Part Codes and Related Equipment

All expansion modules are supplied with a base software level and should be upgraded to match the core software of the control unit in the IP Office system. Expansion modules include an external power supply unit (PSU) and an appropriate interconnect cable. They do not include a locale specific power cord for the external PSU or any phone extension cables.

Item	Variant	Country	SAP Code
IPO 500 Digital Station 16A RJ21 UNIT ASSY	**RJ21**	All	700500699
IPO 500 Digital Station 30A RJ21 UNIT ASSY	**RJ21**		700500698
IEC60320 C13 Power Cord 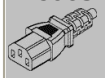	**CEE7/7**	Europe	700289762
	BS1363	United Kingdom	700289747
	NEMA5-15P	North America	700289770
Mounting Kit 202	**IPO IP500 RACK MNTG KIT V3**	All	700503160

RJ21 Cable Pin Out

The following pin-out is used for the RJ21 ports.

1st RJ21 Connector

Port		Pin	Wire
1	Tip	26	White/Blue
	Ring	1	Blue/White
2	Tip	27	White/Orange
	Ring	2	Orange/White
3	Tip	28	White/Green
	Ring	3	Green/White
4	Tip	29	White/Brown
	Ring	4	Brown/White
5	Tip	30	White/Slate
	Ring	5	Slate/White
6	Tip	31	Red/Blue
	Ring	6	Blue/Red
7	Tip	32	Red/Orange
	Ring	7	Orange/Red
8	Tip	33	Red/Green
	Ring	8	Green/Red
9	Tip	34	Red/Brown
	Ring	9	Brown/Red
10	Tip	35	Red/Slate
	Ring	10	Slate/Red
11	Tip	36	Black/Blue
	Ring	11	Blue/Black
12	Tip	37	Black/Orange
	Ring	12	Orange/Black
13	Tip	38	Black/Green
	Ring	13	Green/Black
14	Tip	39	Black/Brown
	Ring	14	Brown/Black
15	Tip	40	Black/Slate
	Ring	15	Slate/Black
16	Tip	41	Yellow/Blue
	Ring	16	Blue/Yellow
Not Used		42	Yellow/Orange
		17	Orange/Yellow
		43	Violet/Slate
		08	Slate/Violet

2nd RJ21 Connector

Port		Pin	Wire
1	Tip	26	White/Blue
	Ring	1	Blue/White
2	Tip	27	White/Orange
	Ring	2	Orange/White
3	Tip	28	White/Green
	Ring	3	Green/White
4	Tip	29	White/Brown
	Ring	4	Brown/White
5	Tip	30	White/Slate
	Ring	5	Slate/White
6	Tip	31	Red/Blue
	Ring	6	Blue/Red
7	Tip	32	Red/Orange
	Ring	7	Orange/Red
8	Tip	33	Red/Green
	Ring	8	Green/Red
9	Tip	34	Red/Brown
	Ring	9	Brown/Red
10	Tip	35	Red/Slate
	Ring	10	Slate/Red
11	Tip	36	Black/Blue
	Ring	11	Blue/Black
12	Tip	37	Black/Orange
	Ring	12	Orange/Black
13	Tip	38	Black/Green
	Ring	13	Green/Black
14	Tip	39	Black/Brown
	Ring	14	Brown/Black
Not Used		40	Black/Slate
		15	Slate/Black
		41	Yellow/Blue
		16	Blue/Yellow
		42	Yellow/Orange
		17	Orange/Yellow
		43	Violet/Slate
		08	Slate/Violet

10.5.5 Phone 16/30

IP500 Phone modules can be used to add additional PHONE ports to an IP Office system.

The module is available in 16 and 30 port variants, referred to as the IP500 Phone 16 and IP500 Phone 30 respectively.

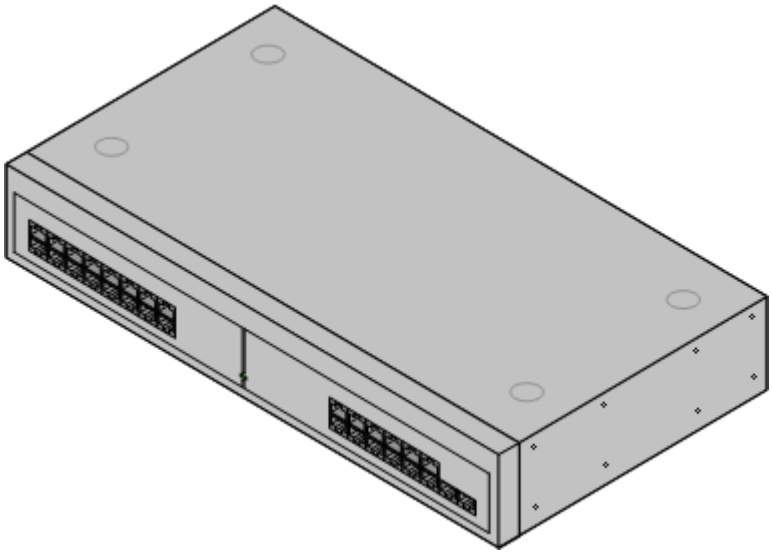

Feature	Details
Supported on	IP500 and IP500 V2.
Locales	Supported in all IP Office locales 51.
Software Level	IP Office core software level 2.1(36) minimum. Bin file = dvpots.bin.
Included	Power supply unit (see below) and Expansion Interconnect cable.
Power Supply	The module is supplied with a Earthed 3-Pin, 60W external power supply unit. The PSU has an integral power cord for connection to the module's DC I/P socket. A locale specific IEC60320 C13 power cord 36 for the external PSU is required but is not supplied with the module.
Mounting	The module is designed as a free-standing module that can be stacked on or under other IP Office modules. The module can be rack or wall mounted using the IPO IP500 RACK MNTG KIT V3 274.
Dimensions	Width: 445mm/17.5". Depth: 245mm/9.7". Height: 71mm/2.8".
Weight	Unboxed: 3.1Kg/6.94lbs. Boxed: 4.4Kg/9.7lbs. (Based on Phone 30 V2)

Module Front

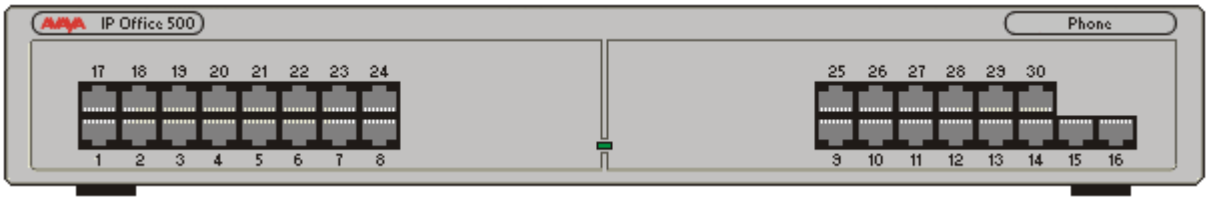

Module Center LED	The center LED on all external expansion modules is used to indicate the overall state of the module as follows: • **Red flashing** = Module starting up/Loading firmware. • **Red on** = Error. • **Green on** = Module okay. • **Green flashing** = Module starting up/Loading firmware (IP500 DS16A/30A module only).

Module Rear

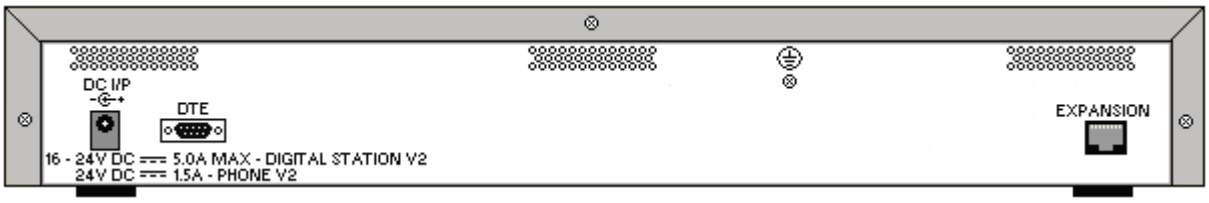

Ports	Description
DC I/P 395	DC power input port. Used for connection of the power lead from an Avaya earthed 60W external power supply unit supplied with the expansion module. A locale specific IEC60320 C13 power cord 36 for the external PSU is required but is not supplied with the module.
DTE 155	9-Way D-Type socket. For Avaya use only.
EXPANSION 398	RJ45 Socket. Used for direct connection to an Expansion port on an IP Office control unit using the Expansion Interconnect cable supplied with the module.
PHONE 401	RJ45 socket. Used for connection of analog phones. Intended for two-wire analog phones. For connection to 4-wire analog phones connection should be via a master socket with ringing capacitors. If connected to an out-of-building extension 42, the connection must be made via additional IP Office Barrier Boxes 144 in addition to the buildings primary protection. The module must also be connected to a protective ground.
⏚	Protective Ground point. Use of a protective ground is required for all installations, see Grounding (Earthing) 41. Where the module is connected to analog extensions in another building, an IP Office Phone Barrier Box V2 (101V) is required at both ends, see Lightning Protection/Out-of-Building Connections 42.

Part Codes and Related Equipment

All expansion modules are supplied with a base software level and should be upgraded to match the core software of the control unit in the IP Office system. Expansion modules include an external power supply unit (PSU) and an appropriate interconnect cable. They do not include a locale specific power cord for the external PSU or any phone extension cables.

Item	Variant	Country	SAP Code
IPO IP500 EXP MOD PHONE 16	**16 Ports**	All	700449507
IPO IP500 EXP MOD PHONE 30	**30 Ports**	All	700426224
IEC60320 C13 Power Cord	**CEE7/7**	Europe	700289762
	BS1363	United Kingdom	700289747
	NEMA5-15P	America	700289770
Mounting Kit 202	**IPO IP500 RACK MNTG KIT V3**	All	700503160
IPO PHONE BARRIER BOX (101V) RHS		All	700385495

10.6 Feature Keys

The serial number of the feature key fitted to the IP Office control unit is used as the basis for all licenses issued for that IP Office system and is used to regularly re-validate the licenses. If the feature key is removed, over the next few hours licensed features will stop operating.

10.6.1 IP500 V2 System SD Cards

This type of feature key is used with IP500 V2 control units and is a mandatory item. The control unit must be fitted with one of these feature keys even if no licenses are being used.

The serial number for licenses issued for use with this type of feature key is printed on the card label and prefixed by **FK**. This type of feature key is also a memory card used for other system functions and to provide Embedded Voicemailif required.

- By default the card can be used for 2 ports of Embedded Voicemail. Additional ports up to a maximum of 6 can be enabled by the addition of licenses 406. The voicemail mailbox message and prompt capacity supports 2 simultaneous connections and 15 hours of storage. This can be expanded up to 6 channels by the addition of licenses, each of which enables an additional two channels and an additional 5 hours of storage.
- ⚠ **WARNING**
  These cards should only be formatted using IP Office Manager or IP Office System Status Application. The cards should only be removed from a system after either a card shut down 178 or a system shut down 180.

Feature Key Dongle	SAP Code
IPO IP500 V2 SYS SD CARD A-LAW	700500924
IPO IP500 V2 SYS SD CARD MU-LAW	700500925
IPO IP500 V2 SYS SD CARD PARTNER	700500926
IPO IP500 V2 SYS SD CARD NORSTAR	700500927

- **IP Office U-Law SD Card**
  A system fitted with this type of card will default to U-Law telephony. For pre-IP Office Release 7.0 software, the system will default to IP Office standard mode. For IP Office Release 7.0+, the system will default to IP Office Basic Edition - Quick Mode ***Key System*** operation. Intended for North American locales.
- **IP Office A-Law SD Card**
  A system fitted with this type of card will default to A-Law telephony. For pre-IP Office Release 7.0 software, the system will default to IP Office standard mode. For IP Office Release 7.0+, the system will default to IP Office Basic Edition - Quick Mode ***PBX System*** operation. Intended for locales outside North America.
- **IP Office Partner Edition SD Card**
  A system fitted with this type of card will default to U-Law telephony and IP Office Basic Edition - PARTNER® Mode ***Key System*** operation. Supported only in North American locales.
- **IP Office Norstar Edition SD Card**
  A system fitted with this type of card will default to A-Law telephony and IP Office Basic Edition - Norstar Mode ***Key System*** operation. Supported only in Middle East and North African locales.
- **Avaya B5800 Branch Gateway**
  This type of SD card intended to be used with B5800 Branch Gateway systems. The Avaya Branch Gateway System SD card can only be used for Avaya Branch Gateway operation and cannot be used to change modes to IP Office. You also cannot use or change an IP Office SD card for use with an B5800 Branch Gateway system. B5800 Branch Gateway systems are not covered by this documentation.

Embedded Voicemail

The System SD card can be used to provide Embedded Voicemail for the system. Unlicensed, the Embedded Voicemail provided by the system supports 2 simultaneous connections and 15 hours of storage. This can be expanded up to 6 channels by the addition of licenses 406, each of which enables an additional two channels and an additional 5 hours of storage.

For full details of Embedded Voicemail setup and configuration, refer to the Embedded Voicemail Installation manual. The cards are preloaded with the following languages:

- Arabic, Chinese-Mandarin, Chinese-Cantonese, Danish, Dutch, English-UK, English-US, Finnish, French, French-Canadian, German, Italian, Korean, Norwegian, Portuguese, Portuguese Brazilian, Russian, Swedish, Spanish, Spanish-Latin, Spanish-Argentinean.

PCM Encoding

- **A-Law or Mu-Law**
  PCM (Pulse Code Modulation) is a method for encoding voice as data. In telephony, two methods PCM encoding are widely used, A-law and Mu-law (also called U-law). Typically Mu-law is used in North America and a few other locations while A-law by the rest of the world. As well as setting the correct PCM encoding for the region, the A-Law or Mu-Law setting of an IP Office system when it is first started affects a wide range of regional defaults relating to line settings and other values.
  - For IP400 IP Office systems, each control units was manufactured as either an A-Law variant or a Mu-Law variant.
  - For IP500 and IP500 V2 systems, the encoding default is set by the type of Feature Key installed when the system is first started.

10.6.2 IP500 Smart Card

This type of feature key is used with IP500 control units and is a mandatory item. The control unit must be fitted with one of these feature keys even if no licenses are being used.

The serial number for licenses issued for use with this type of feature key is printed on the card and prefixed by **SN**.

Feature Key Dongle	SAP Code
Smart Card Feature Key (Mu-Law)	700417470
Smart Card Feature Key (A-Law)	700417488

- **A-Law or Mu-Law**
  PCM (Pulse Code Modulation) is a method for encoding voice as data. In telephony, two methods PCM encoding are widely used, A-law and Mu-law (also called U-law). Typically Mu-law is used in North America and a few other locations while A-law by the rest of the world. As well as setting the correct PCM encoding for the region, the A-Law or Mu-Law setting of an IP Office system when it is first started affects a wide range of regional defaults relating to line settings and other values.
  - For IP400 IP Office systems, each control units was manufactured as either an A-Law variant or a Mu-Law variant.
  - For IP500 and IP500 V2 systems, the encoding default is set by the type of Feature Key installed when the system is first started.

10.7 IP400 Trunk Cards

IP400 trunk cards can be used in IP500 and IP500 V2 controls units by being fitted onto an IP500 Legacy Card Carrier 228 base card. Up to 2 cards can be added to the control unit in this way.

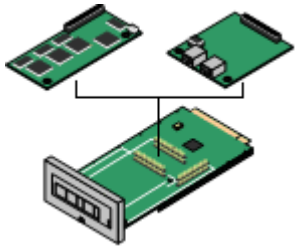

The following IP400 trunk card types are supported in this way by IP Office Release 8.1:

IP400 Trunk Cards		IP500	IP500 V2
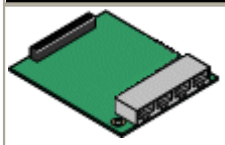	**Analog Trunk Card (ATM4)** 255 Provides 4 RJ45 loop-start analog trunk ports. The card is available in several locale specific variants. This card has been superseded by the ATM4U card below. Additional loop or ground start analog trunks can also be added using **Analog Trunk** 262 external expansion modules.	✓	✓
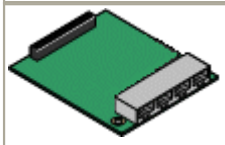	**Analog Trunk Card (ATM4U)** 254 Provides 4 RJ45 loop-start analog trunk ports as per the ATM4 above but available in a single worldwide variant. Also supports adjustable echo cancellation on IP Office 3.1. Additional loop or ground start analog trunks can also be added using Analog Trunk 262 external expansion modules.	✓	✓
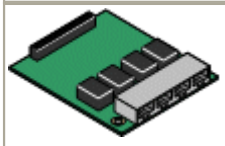	**Quad BRI Trunk Card** 255 Provides support for 4 RJ45 BRI (2B+D) trunk ports. These can be configured to ETSI or AusTS013 operation. The ports include 100ohm termination.	✓	✓
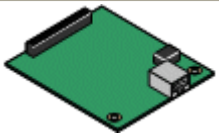	**Single PRI T1 Trunk Cards** 256 Supports PRI (23B+D) trunks and T1 Robbed-Bit (24B) trunks through a single RJ45 port. The mode of operation is selected in the IP Office configuration.	✓	✓
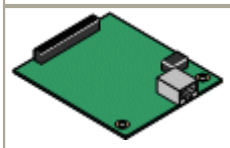	**Single E1 PRI Trunk Cards** 256 Supports PRI (30B+D) trunks through a single RJ45 port. The port can be configured for PRI or QSIG operation.	✓	✓
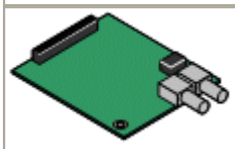	**Single E1R2 Trunk Cards** 257 Supports PRI (30B+D) trunks using E1R2 signaling. Available in coaxial or RJ45 connector variants. Coaxial variants are not supported on an IP500 carrier card.	✓	✓
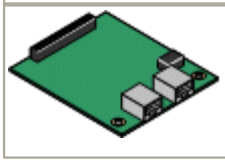	**Dual PRI Trunk Cards** 256 As the single PRI cards above but supporting the connection of two PRI trunks. On the IP406 V2, supported in Slot A only.	✓	✓

10.7.1 Analog Trunk Card Uni (ATM4U)

This card supersedes the previous Analog Trunk cards and is referred to as the "ATM4U". It can be identified by a label on the base of the card.

The card is supported on IP Office software 2.1(36) and higher. Unlike the previous ATM4 card, the same ATM4U card variant can be used in all locales.

For systems running IP Office software 3.1 or higher, the echo cancellation used on each trunk can be switched off or on (16ms).

The card provides 4 RJ45 sockets for analog trunk connections 392. The card only supports loop-start trunks. For ground-start trunks an Analog Trunk expansion module 262 should be used.

- **Power Failure Operation**
  There are no power failure extension connections provided for the analog trunk card. If this is a requirement, the ATM16 expansion module should be used.
- ⚠ **WARNING**
  In all IP Office installations, any module or control unit using analog trunk connections must be connected to a functional earth 41.
- ⚠ **WARNING**
  Within the Republic of South Africa and in areas of high lightning risk, any module or control unit using analog trunk connections must be connected to a protective ground 41 and to surge protection equipment 42.

ATM4U Trunk Card		Country	SAP Code	IP500	IP500 V2
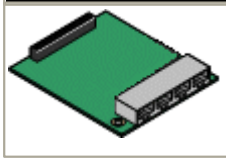	**ATM4 Uni (Loop-Start)**	All	700359938	✓	✓

- The card includes two plastic stand off pillars for installation and a replacement blanking plate for the rear of IP400 control units.
- For the IP500 and IP500 V2 control units, an IP500 Carrier Card is required, up to a maximum of 2 IP500 Carrier Cards.

10.7.2 Analog Trunk Cards (ATM4)

The Analog Trunk card is also referred to as the "ATM4". It provides 4 RJ45 sockets for analog trunk connections 392. The card only supports loop-start trunks.

The card is available in a number of locale specific variants as detailed below.

- **Power Failure Operation**
  There are no power failure extension connections provided for the analog trunk card.
- ⚠ **WARNING**
  In all IP Office installations, any module or control unit using analog trunk connections must be connected to a functional earth 41.
- ⚠ **WARNING**
  Within the Republic of South Africa and in areas of high lightning risk, any module or control unit using analog trunk connections must be connected to a protective ground 41 and to surge protection equipment 42.

ATM4 Trunk Cards		Country	SAP Code	IP500	IP500 V2
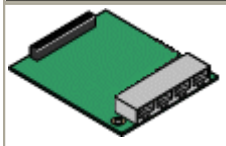	**IP400 Analog 4 (Loop-Start)**	North and South America	700185192	–	–
	IP400 Analog 4 EU (Loop-Start)	Europe	700241672	–	–
	IP400 Analog 4 NZ (Loop-Start)	New Zealand	700241706	–	–

- These cards include two plastic stand off pillars for installation and a replacement blanking plate for the rear of IP400 control units.

10.7.3 BRI Trunk Cards

The BRI trunk card is also referred to as the "Quad BRI". It provides 4 RJ45 sockets for ETSI BRI trunk connections, with each trunk supporting 2B+D channels.

Variant		Country	SAP Code	IP500	IP500 V2
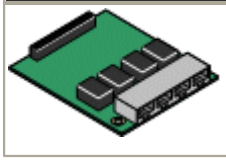	**IP400 BRI**	All	700185168	✓	✓
	IP400 BRI 8 (UNI)	All except China	700262017	✓	✓

- The trunk card ports include 100 ohm termination.
- These cards include two plastic stand off pillars for installation and a replacement blanking plate for the rear of IP400 control units.
- For the IP500 and IP500 V2 control units, an IP500 Carrier Card is required, up to a maximum of 2 IP500 Carrier Cards.

10.7.4 T1 PRI Trunk Cards

These trunk cards support 23B+D primary rate (US PRI) trunks and 24B T1 robbed-bit trunks. The mode of operation is selected within the IP Office configuration.

The T1 PRI card includes an integral CSU/DSU that can be activated through the IP Office Monitor application.

PRI Trunk Cards		Country	SAP Code	IP500	IP500 V2
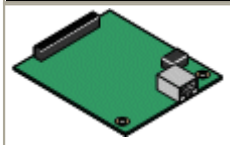	**IP400 PRI 24 T1**	North America	700185200	✓	✓
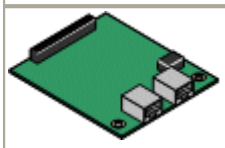	**IP400 PRI 48 T1**	North America	700185218	✓	✓

- These cards include two plastic stand off pillars for installation and a replacement blanking plate for the rear of IP400 control units.
- For dual port cards the IP406 V2 only supports a single dual card in Slot A.
- For the IP500 and IP500 V2 control units, an IP500 Carrier Card is required, up to a maximum of 2 IP500 Carrier Cards.

10.7.5 E1 PRI Trunk Cards

These cards support primary rate trunks providing 30B+D channels.

E1 PRI trunk Cards		Country	SAP Code	IP500	IP500 V2
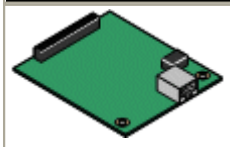	**IP400 PRI 30 E1 (1.4)**	All except China and CALA.	700272461	✓	✓
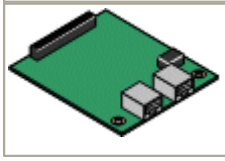	**IP400 PRI 60 E1**	All except China and CALA.	700185184	✓	✓

- These cards include two plastic stand off pillars for installation and a replacement blanking plate for the rear of IP400 control units.
- For dual port cards the IP406 V2 only supports a single dual card in Slot A.
- For the IP500 and IP500 V2 control units, an IP500 Carrier Card is required, up to a maximum of 2 IP500 Carrier Cards.

10.7.6 E1R2 PRI Trunk Cards

These cards support E1 trunks with R2 signalling. Each trunk provides up to 30B+D channels.

E1R2 PRI trunk cards are available with either RJ45 or coaxial cable connectors.

E1R2PRI trunk Cards		Country	SAP Code	IP500	IP500 V2
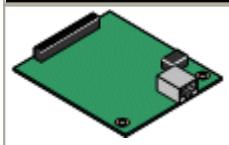	**IP400 PRI 30 E1R2 RJ45**	CALA, Korea, China	700241631	✓	✓
	IP400 PRI 60 E1R2 RJ45		700241649	✓	✓
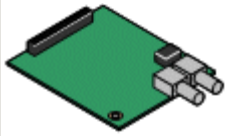	**IP400 PRI 30 E1R2 COAX**	CALA	700241656	–	–
	IP400 PRI 60 E1R2 COAX		700241664	–	–

- These cards include two plastic stand off pillars for installation and a replacement blanking plate for the rear of IP400 control units.
- For E1R2 coaxial card, a ground-jumper cable and coaxial connector locking rings are included.
- For dual port cards the IP406 V2 only supports a single dual card in Slot A.

- For the IP500 and IP500 V2 control units, an IP500 Carrier Card is required, up to a maximum of 2 IP500 Carrier Cards.

E1R2 coax trunk cards must be grounded correctly and require the IP Office control unit to be connected to a protective ground 41. Normally the ends of one connection is grounded. For example, if the exchange Tx1 is grounded, the IP Office Rx1 should also be grounded. However this must be confirmed with the line provider to establish which ends they want grounded.

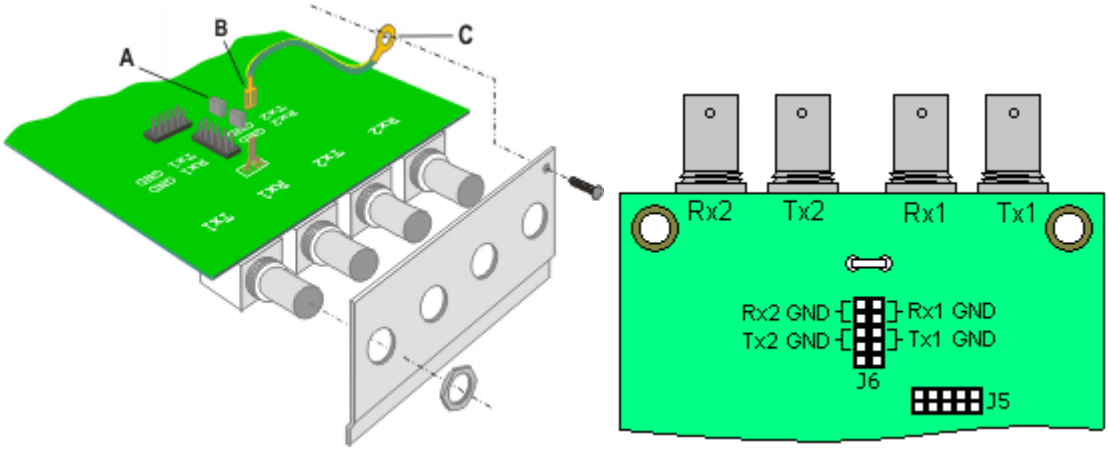

1. Connect the ground strap spade end (B) supplied with the card to the spade connection on the card and the other end (C) to the chassis with the long securing screw also supplied with the card.
2. Use the two jumpers supplied with the card, match the ground selection of the line provider. For example, if the line provider has grounded their Tx1, place a jumper across the two Rx1 pins of jumper block J6.

10.8 IP400 Internal Cards

10.8.1 Embedded Voicemail Memory Cards

This card is supported on IP500 control units. It is a specially formatted Compact Flash cards that provides Embedded Voicemail operation and can also be configured for basic auto-attendant support. Use of these cards for voicemail does not require a license.

- These cards are not hot swappable. Removal of the cards while the IP Office control unit is powered may cause lose or corruption of messages and prompts. IP Office Manager can be used to shutdown a memory card 131 before its removal.

Variant		Country	IP500	IP500 V2	SAP Code
	Uses a specially formatted Avaya 512MB Compact Flash card. This card provides up to 15 hours storage for uncompressed prompts, greetings and messages. Operation of this card does not require voice compression channels. Supports up to 4 simultaneous connections, non expandable.	All	✓	–	700343460

- From IP Office 3.0 onwards, the prompt files for the following languages are pre-installed on the Avaya memory cards:
  - Arabic, Chinese-Mandarin, Chinese-Cantonese, Danish, Dutch, English-UK, English-US, Finnish, French, French-Canadian, German, Italian, Korean, Norwegian, Portuguese, Portuguese Brazilian, Russian, Swedish, Spanish, Spanish-Latin, Spanish-Argentinean.
- For full details of Embedded Voicemail setup and configuration, refer to the Embedded Voicemail Installation manual.
- The memory card can also be used for storage of files normally obtained via TFTP transfer. For example the music-on-hold wav file and supported 4600 Series/5600 Series software files. This will however reduce storage space for prompt and message files if Embedded Voicemail is being used. Non-Avaya memory cards can be used for this function.
- The memory card is specially formatted by Avaya for Embedded Voicemail operation. Reformatting the card will stop Embedded Voicemail support and require the card to be replaced.

10.8.2 Voice Compression Modules

IP400 VCMs are optional cards that can be installed inside the IP Office control unit. Each VCM provides a number of voice compression channels 50, indicated by a number suffix. For example, a VCM 8 has 8 voice compression channels.

- For the IP500 control unit, to use an IP400 Voice Compression Card an IP500 Carrier Card 228 is also required for each IP400 VCM. For IP500 control units, voice compression channels can also be added using up to 2 IP500 VCM base cards with VCM licenses 230.

VCM Cards		SAP Code	IP500	IP500 V2
25ms echo cancellation.	**IP400 VCM5***	700185119	–	–
	IP400 VCM10*	700185127	–	–
	IP400 VCM20*	700185135	–	–
	IP400 VCM30	700293939	✓	✓
64ms echo cancellation.	**IP400 VCM4**	700359854	✓	✓
	IP400 VCM8	700359862	✓	✓
	IP400 VCM16	700359870	✓	✓
	IP400 VCM24	700359888	✓	✓
Number of IP400 VCM cards.			2	2
Maximum number of channels.			128	148

1. These modules are still supported on some systems but are no longer available from Avaya.

10.9 IP400 Expansion Modules

The following IP400 external expansion modules are supported by IP Office Release 8.1 and can be used with an IP500 and IP500 V2 control units. Each module uses an external power supply unit 36 supplied with the module. A locale specific power cord 37 for the PSU must be ordered separately.

If being rack mounted these units use the IP400 rack mounting kit. If being rack mounted, these units use the IPO IP500 RACK MNTG KIT. They cannot be wall mounted.

- **IP400 Analog Trunk Module (ATM16)** 262
  Provides an additional 16 ANALOG 392 ports for connection of analog trunks. Supports both loop-start and ground-start trunks.
  - Available in a number of variants for different locales.
  - Use with ground start trunks requires that the trunk module and the IP Office control unit are grounded.

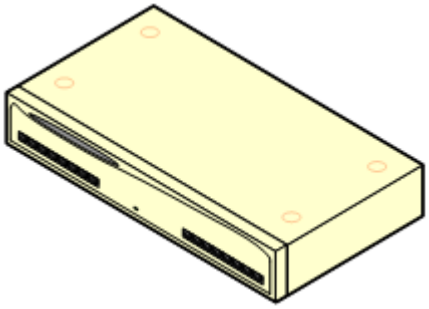

- **IP400 Digital Station Module** 266
  Provides, depending on the variant, an additional 16 or 30 DS 395 ports for supported Avaya digital phones. This module has been superseded by the Digital Station V2.

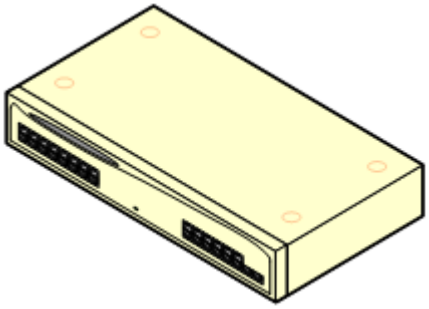

- **IP400 Digital Station Module V2** 264
  Provides, depending on variant, an additional 16 or 30 DS 395 ports for supported Avaya digital phones 46. Supersedes the previous Digital Station module.

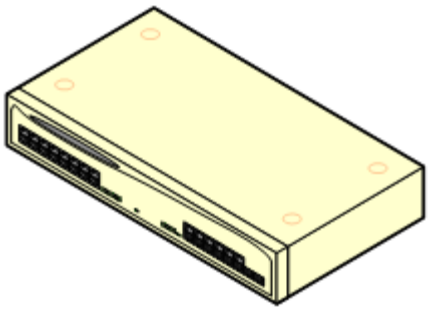

- **IP400 Phone Module** 270
  Provides, depending on variant, an additional 8, 16 or 30 POT 401 ports for analog phones. This module has been superseded by the Phone Module V2.

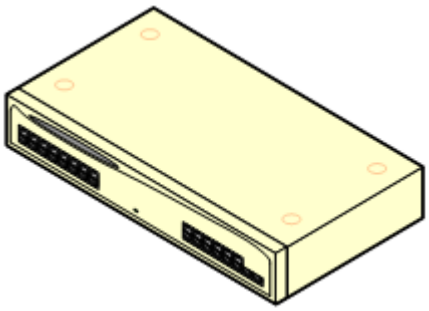

- **IP400 Phone Module V2** 268
  Provides, depending on variant, an additional 8, 16 or 30 PHONE 401 ports for analog phones. Supersedes the previous Phone module. With IP Office 3.1, the Phone V2 supports a wider range of message waiting indication (MWI) options than Phone V1 modules.
  - With V2 units, the labeling of analog phone ports was changed from POT to PHONE.

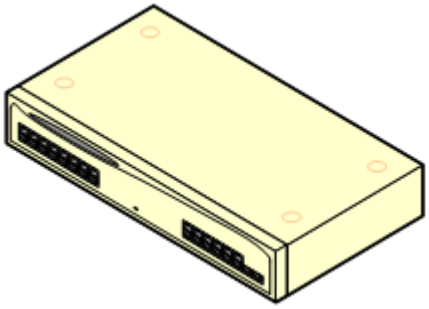

- **IP400 So8 Module** 272
  Provides 8 ETSI BRI-So 393 ports for the connection of ISDN devices. This unit is not intended to support BRI trunks.

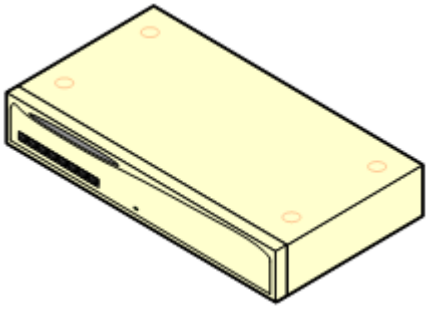

10.9.1 Analog Trunk 16

The IP400 Analog Trunk module (also known as the ATM16) is used to add 16 additional analog trunks to an IP Office system. The module supports both loop-start and, with suitable grounding, ground-start trunks.

- **WARNING**
  In all IP Office installations, any module being used for analog trunk connections must be connected to a functional earth 41.
- **WARNING**
  Within the Republic of South Africa and in areas of high lightning risk, any module using analog trunk connections must be connected to a protective ground 41 and to surge protection equipment 42.

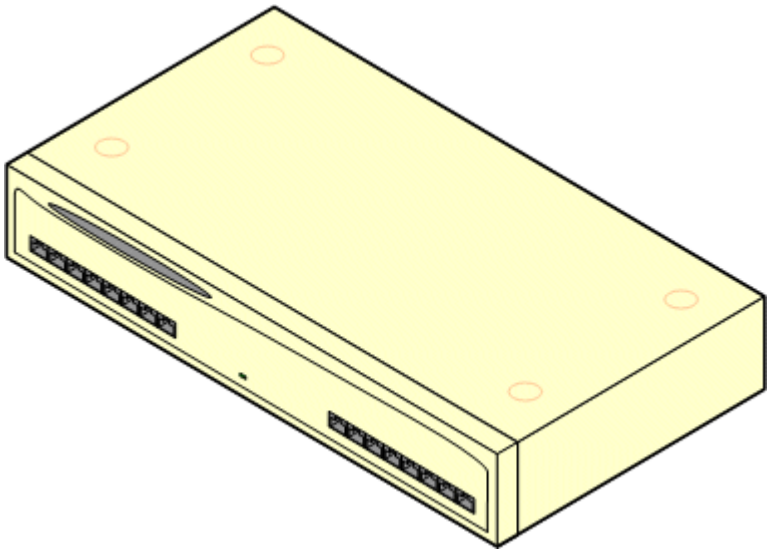

Feature	Details
Supported on	All IP Office control units except Small Office Edition.
Locales	Specific variants are provided for different IP Office locales, see below.
Software Level	IP Office core software level 1.0 minimum. Bin file = naatm16.bin.
Included	Power supply unit (see below) and Expansion Interconnect cable.
Power Supply	The module is supplied with a 2-pin, 40W external power supply unit. The PSU has an integral power cord for connection to the module's DC I/P socket. A locale specific IEC60320 C7 power cord 36 for the external PSU is required but is not supplied with the module.
Mounting	The module is designed as a free-standing module that can be stacked on or under other IP Office modules. The module can be rack mounted in a 19" rack system using the optional IP400 Rack Mounting Kit.
Dimensions	Width: 445mm/17.5". Depth: 245mm/9.7". Height: 71mm/2.8"/2U.
Weight	Unboxed: 2.9Kg/6.6lbs. Boxed: 4.2Kg/9.4lbs.

Module Front

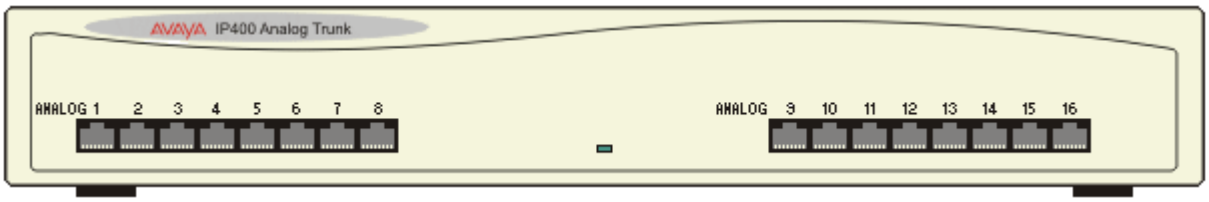

Module Rear

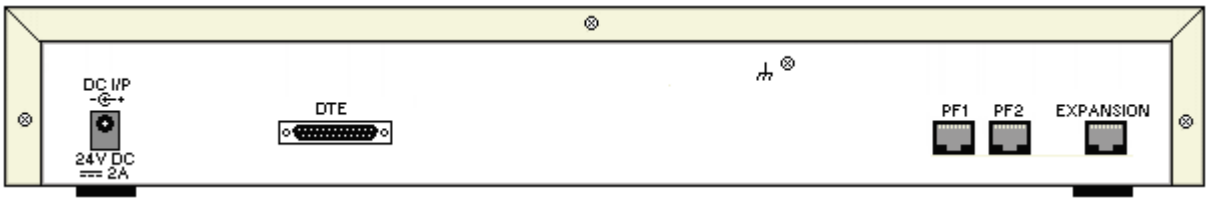

Ports	Description
ANALOG 392	RJ45 socket. Used for connection to analog trunks. Ports can be configured as either loop-start or ground-start trunks through the IP Office configuration. In the event of power failure, Analog ports 1 and 2 are directly connected to analog extension ports PF1 and PF2 respectively. If used the connected phones must be clearly labeled as power failure devices. This is only supported for loop-start analog trunks.
DC I/P 395	DC power input port. Used for connection of the power lead from an Avaya 40W external power supply unit supplied with the expansion module. A locale specific IEC60320 C7 power cord 36 for the external PSU is required but is not supplied with the module.
DTE 155	25-Way D-Type socket. For Avaya use only.
EXPANSION 398	RJ45 Socket. Used for direct connection to an Expansion port on an IP Office control unit using the Expansion Interconnect cable supplied with the module.
PF 400	RJ45 socket. Power failure analog extension ports. See Analog section above.
⏚	Ground point. Used for connection of a functional earth 41 if required. On older modules where this screw is not present, the top-center cover screw should be used instead. • IMPORTANT In all IP Office installations, any module being used for analog trunk connections must be connected to a functional earth 41. • ⚠ WARNING Within the Republic of South Africa and in areas of high lightning risk, any module using analog trunk connections must be connected to a protective ground 41 and to surge protection equipment 42.

Part Codes and Related Equipment

All expansion modules are supplied with a base software level and should be upgraded to match the core software of the control unit in the IP Office system. Expansion modules include an external power supply unit (PSU) and an appropriate interconnect cable. They do not include a locale specific power cord for the external PSU or any phone extension cables.

Item	Variant	Country	SAP Code
IP400 Analog Trunk 16	America	America	700211360
	Europe	Europe	700241680
	New Zealand	New Zealand	700241698
IEC60320 C7 Power Cord 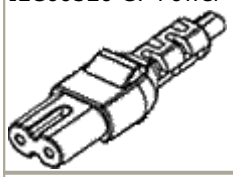	CEE7/16	Europe	700213382
	BS1363	United Kingdom	700213374
	NEMA1-15	America	700213390
	Korea	Korea	700254519
IP400 Rack Mounting Kit		All	700210800

10.9.2 Digital Station V2

The IP400 Digital Station V2 (also known as DS V2) is used to add additional DS ports to an IP Office system. The DS V2 is available in 16 and 30 port variants, referred to as DS16 V2 and DS30 V2 respectively.

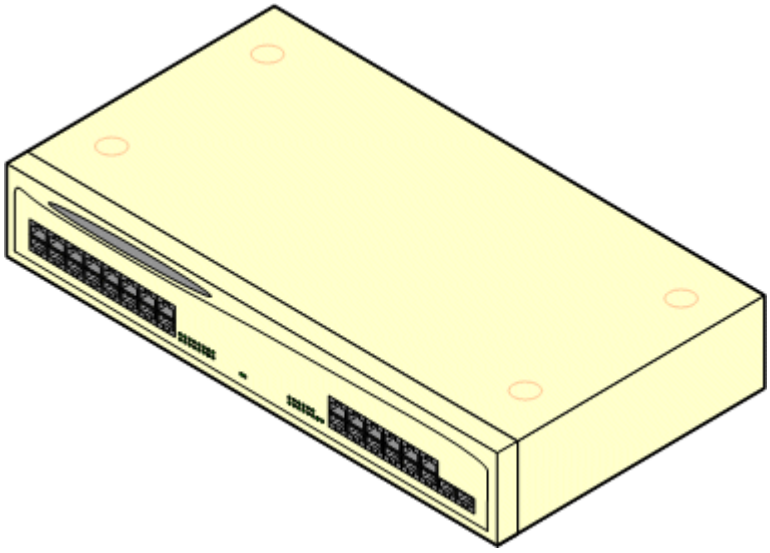

The DS V2 supersedes the original IP400 Digital Station, now referred to as a DS V1. The module version is indicated by labels both the base and the rear of the module.

Feature	Details
Supported on	All IP Office control units except Small Office Edition.
Locales	Supported in all IP Office locales 51.
Software Level	IP Office core software level 2.1(31) minimum. Bin file = nadcpV2.bin.
Included	Power supply unit (see below) and Expansion Interconnect cable.
Power Supply	The module is supplied with a Earthed 3-Pin, 60W external power supply module. The PSU has an integral power cord for connection to the module's DC I/P socket. A locale specific IEC60320 C13 power cord 36 for the external PSU is required but is not supplied with the module.
Mounting	The module is designed as a free-standing module that can be stacked on or under other IP Office modules. The module can be rack mounted in a 19" rack system using the optional IP400 Rack Mounting Kit.
Dimensions	Width: 445mm/17.5". Depth: 245mm/9.7". Height: 71mm/2.8"/2U.
Weight	Unboxed: 3.5Kg/7.8lbs. Boxed: 4.8Kg/10.8lbs. (Based on DS30 V2)

Module Front

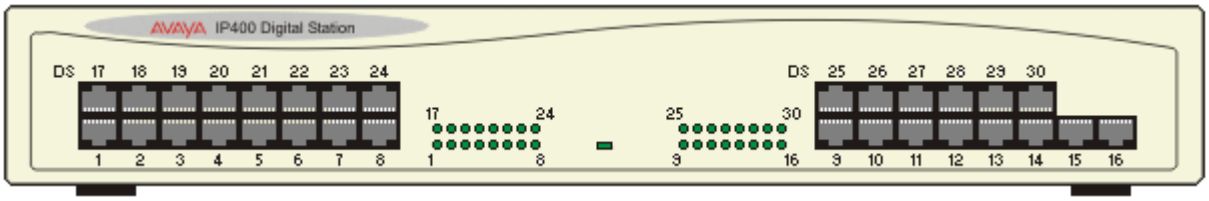

Module Rear

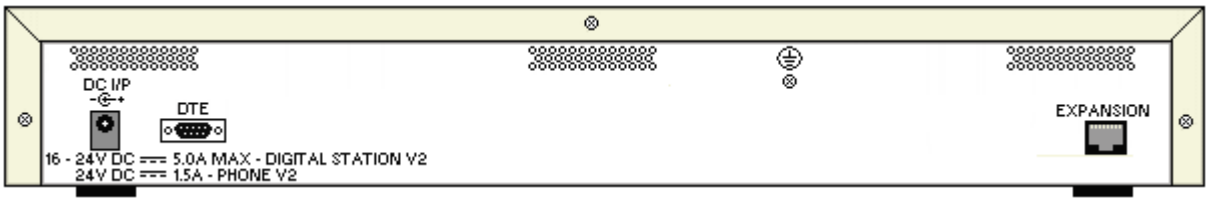

Ports	Description
DC I/P 395	DC power input port. Used for connection of the power lead from an Avaya earthed 60W external power supply unit supplied with the expansion module. A locale specific IEC60320 C13 power cord 36 for the external PSU is required but is not supplied with the module.
DS 395	RJ45 socket. Digital Station port. Used for connection of IP Office supported DS phones 46. If connected to an out-of-building extension 42, the connection must be made via additional IROB barrier devices in addition to the buildings primary protection. The module must also be connected to a protective ground.
DTE 155	9-Way D-Type socket. For Avaya use only.
EXPANSION 398	RJ45 Socket. Used for direct connection to an Expansion port on an IP Office control unit using the Expansion Interconnect cable supplied with the module.
⏚	Protective Ground point. Use of a protective ground is required for all installations, see Grounding (Earthing) 41. Where the module is connected to analog extensions in another building, an IP Office Phone Barrier Box V2 (101V) is required at both ends, see Lightning Protection/Out-of-Building Connections 42.

Part Codes and Related Equipment

All expansion modules are supplied with a base software level and should be upgraded to match the core software of the control unit in the IP Office system. Expansion modules include an external power supply unit (PSU) and an appropriate interconnect cable. They do not include a locale specific power cord for the external PSU or any phone extension cables.

Item	Variant	Country	SAP Code
IP400 Digital Station V2	16 Ports	All	700359839
	30 Ports		700359847
IEC60320 C13 Power Cord 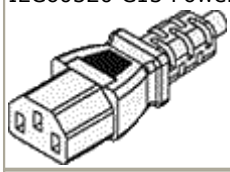	CEE7/7	Europe	700289762
	BS1363	United Kingdom	700289747
	NEMA5-15P	America	700289770
IP400 Rack Mounting Kit		All	700210800

10.9.3 Digital Station

The IP400 Digital Station module (also known as DS module) is used to add additional DS ports to an IP Office system.

The DS module is available in 16 and 30 port variants, referred to as DS16 and DS30 modules respectively. The IP400 Digital Station Module has been superseded by the IP400 Digital Station Module V2 264.

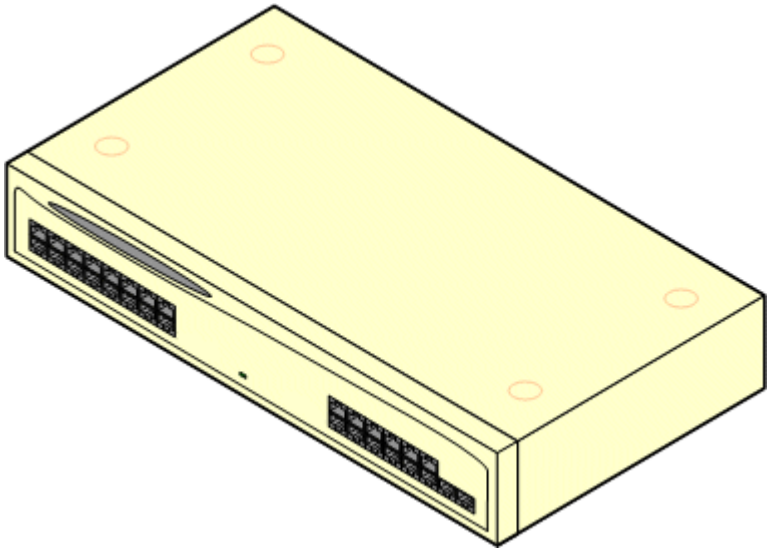

Feature	Details
Supported on	All IP Office control units except Small Office Edition.
Locales	Supported in all IP Office locales 51.
Software Level	IP Office core software level 1.0 minimum. Bin file = nadcp-16.bin.
Included	Power supply unit (see below) and Expansion Interconnect cable.
Power Supply	The module is supplied with a 2-pin, 40W external power supply unit. The PSU has an integral power cord for connection to the module's DC I/P socket. A locale specific IEC60320 C7 power cord 36 for the external PSU is required but is not supplied with the module.
Mounting	The module is designed as a free-standing module that can be stacked on or under other IP Office modules. The module can be rack mounted in a 19" rack system using the optional IP400 Rack Mounting Kit.
Dimensions	Width: 445mm/17.5". Depth: 245mm/9.7". Height: 71mm/2.8"/2U.
Weight	Unboxed: 3.5Kg/7.8lbs. Boxed: 4.8Kg/10.8lbs. (Based on DS30).

Module Front

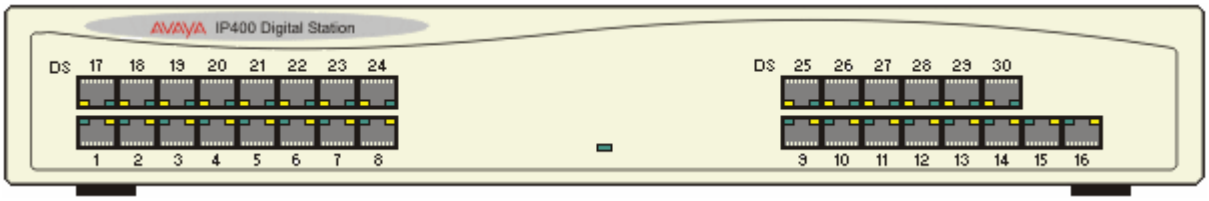

Module Rear

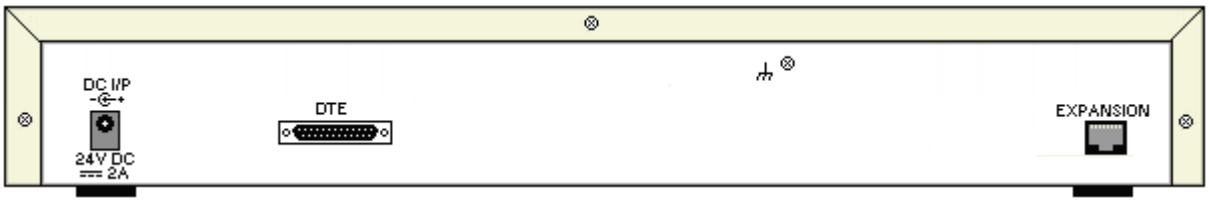

Ports	Description
DC I/P 395	DC power input port. Used for connection of the power lead from an Avaya 40W external power supply unit supplied with the expansion module. A locale specific IEC60320 C7 power cord 36 for the external PSU is required but is not supplied with the module.
DS 395	Digital Station port. Used for connection of IP Office supported DS phones 46. If connected to an out-of-building extension 42, the connection must be made via additional IROB barrier devices in addition to the buildings primary protection. The module must also be connected to a protective ground.
DTE 155	25-Way D-Type socket. For Avaya use only.
EXPANSION 398	RJ45 Socket. Used for direct connection to an Expansion port on an IP Office control unit using the Expansion Interconnect cable supplied with the module.
⏚	Ground point. Used for connection of a protective or functional ground 205 if required. On older modules where this screw is not present, the top-center cover screw should be used instead. Must be connected if any out-of-building extensions 42 are connected to this module.

Part Codes and Related Equipment

All expansion modules are supplied with a base software level and should be upgraded to match the core software of the control unit in the IP Office system. Expansion modules include an external power supply unit (PSU) and an appropriate interconnect cable. They do not include a locale specific power cord for the external PSU or any phone extension cables.

Item	Variant	Country	SAP Code
IP400 Digital Station	16 Ports	All	700184807
	30 Ports		700184880
IEC60320 C7 Power Cord 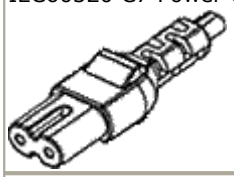	CEE7/16	Europe	700213382
	BS1363	United Kingdom	700213374
	NEMA1-15	America	700213390
	Korea	Korea	700254519
IP400 Rack Mounting Kit		All	700210800

10.9.4 Phone V2

The IP400 Phone V2 module (also known as the Phone V2 module) is used to add additional PHONE ports to an IP Office system. PHONE ports are used for analog phones.

The Phone V2 module is available in 8, 16 and 30 port variants, referred to as the Phone 8, Phone 16 and Phone 30 respectively.

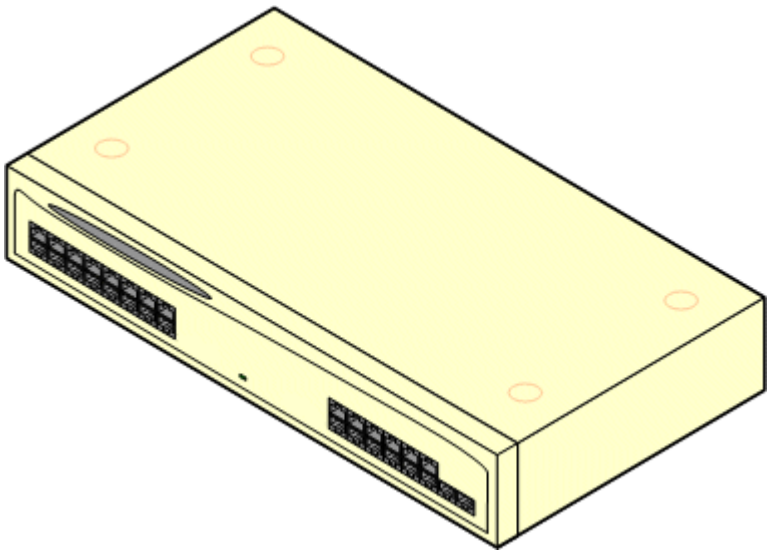

The Phone V2 module supersedes the original IP400 Phone module, now referred to as the Phone V1. The module version is indicated by labels on both the base and the rear of the module. Key changes are:

- The Phone V2 uses an earthed 3-pin 60W external power supply unit.
- With IP Office 3.1, the message waiting indication (MWI) on each port can be configured for ***None***, ***On***, ***51V Stepped***, ***81V***, ***Line Reversal A*** or ***Line Reversal B***. ***On*** uses the default determined by the system locale. Ports on a Phone V2 module can additionally be configured for ***101V*** operation.
- These ports do not include a ringing capacitor. Therefore for connection to 4-wire analog phones, where this is a requirement (typically the United Kingdom and New Zealand), connection should be via a Master socket containing ringing capacitors.
- The DTE serial port on the rear of the module has been changed to a 9-pin D-type socket.

Feature	Details
Supported on	All IP Office control units except Small Office Edition.
Locales	Supported in all IP Office locales.
Software Level	IP Office core software level 2.1(36) minimum. Bin file = dvpots.bin.
Included	Power supply unit (see below) and Expansion Interconnect cable.
Power Supply	The module is supplied with a Earthed 3-Pin, 60W external power supply unit. The PSU has an integral power cord for connection to the module's DC I/P socket. A locale specific IEC60320 C13 power cord 36 for the external PSU is required but is not supplied with the module.
Mounting	The module is designed as a free-standing module that can be stacked on or under other IP Office modules. The module can be rack mounted in a 19" rack system using the optional IP400 Rack Mounting Kit.
Dimensions	Width: 445mm/17.5". Depth: 245mm/9.7". Height: 71mm/2.8"/2U.
Weight	Unboxed: 3.1Kg/6.94lbs. Boxed: 4.4Kg/9.7lbs. (Based on Phone 30 V2)

Module Front

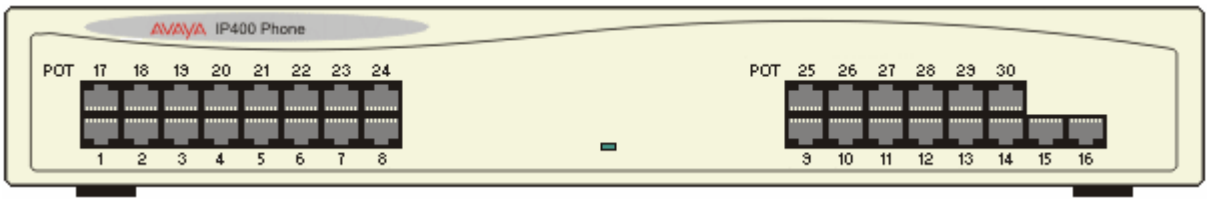

Module Rear

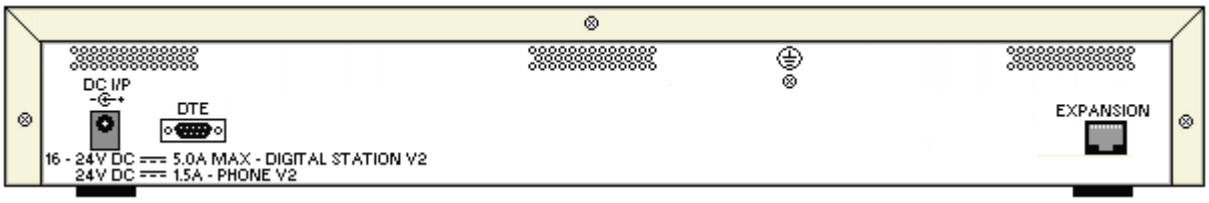

Ports	Description
DC I/P 395	DC power input port. Used for connection of the power lead from an Avaya earthed 60W external power supply unit supplied with the expansion module. A locale specific IEC60320 C13 power cord 36 for the external PSU is required but is not supplied with the module.
DTE 155	9-Way D-Type socket. For Avaya use only.
EXPANSION 398	RJ45 Socket. Used for direct connection to an Expansion port on an IP Office control unit using the Expansion Interconnect cable supplied with the module.
PHONE 401	RJ45 socket. Used for connection of analog phones. Intended for two-wire analog phones. For connection to 4-wire analog phones connection should be via a master socket with ringing capacitors. If connected to an out-of-building extension 42, the connection must be made via additional IP Office Barrier Boxes 144 in addition to the buildings primary protection. The module must also be connected to a protective ground.
⏚	Protective Ground point. Use of a protective ground is required for all installations, see Grounding (Earthing) 205. Where the module is connected to analog extensions in another building, an IP Office Phone Barrier Box V2 (101V) is required at both ends, see Lightning Protection/Out-of-Building Connections 42.

Part Codes and Related Equipment

All expansion modules are supplied with a base software level and should be upgraded to match the core software of the control unit in the IP Office system. Expansion modules include an external power supply unit (PSU) and an appropriate interconnect cable. They do not include a locale specific power cord for the external PSU or any phone extension cables.

Item	Variant	Country	SAP Code
IP400 Phone V2	8 Ports	All	700359896
	16 Ports		700359904
	30 Ports		700359912
IEC60320 C13 Power Cord 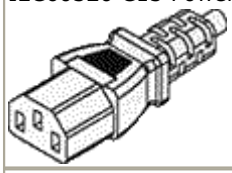	CEE7/7	Europe	700289762
	BS1363	United Kingdom	700289747
	NEMA5-15P	America	700289770
IP400 Rack Mounting Kit		All	700210800

10.9.5 Phone

The IP400 Phone module (also known as the Phone V1 module) is used to add additional POT ports to an IP Office system. POT ports are used for analog phones.

The Phone module is available in 8, 16 and 30 port variants, referred to as the Phone 8, Phone 16 and Phone 30 respectively. The IP400 Phone Module has been superseded by the Phone Module V2 268.

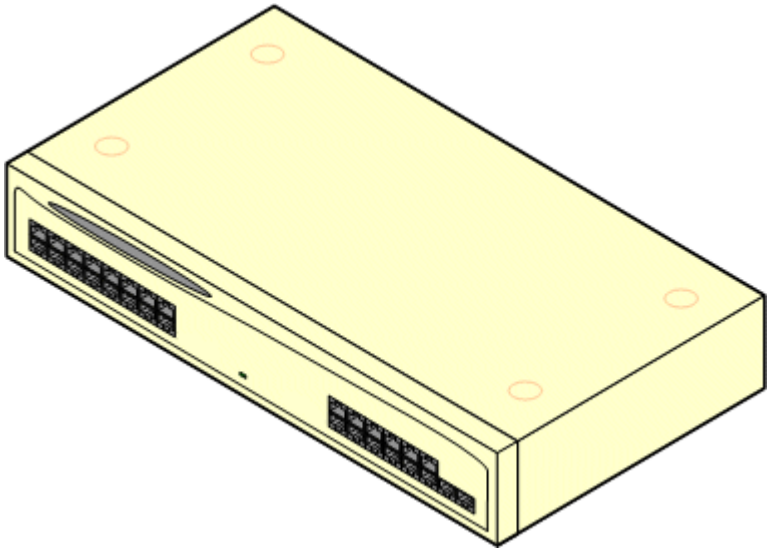

- With IP Office 3.1 and higher, the message waiting indication (MWI) on each POT port can be configured for None, On, 51V Stepped, 81V, Line Reversal A or Line Reversal B. On uses the default determined by the system locale. POT ports on a Phone V2 module can additionally be configured for 101V operation.

Feature	Details
Supported on	All IP Office control units except Small Office Edition.
Locales	Supported in all IP Office locales 51.
Software Level	IP Office core software level 1.0 minimum. Bin file = napots16.bin (earlier units, not supported on IP500) or avpots16.bin (later units).
Included	Power supply unit (see below) and Expansion Interconnect cable.
Power Supply	The module is supplied with a 2-pin, 40W external power supply unit. The PSU has an integral power cord for connection to the module's DC I/P socket. A locale specific IEC60320 C7 power cord 36 for the external PSU is required but is not supplied with the module.
Mounting	The module is designed as a free-standing module that can be stacked on or under other IP Office modules. The module can be rack mounted in a 19" rack system using the optional IP400 Rack Mounting Kit.
Dimensions	Width: 445mm/17.5". Depth: 245mm/9.7". Height: 71mm/2.8"/2U.
Weight	Unboxed: 3.1Kg/6.94lbs. Boxed: 4.4Kg/9.7lbs. (Based on Phone 30 V2).

Module Front

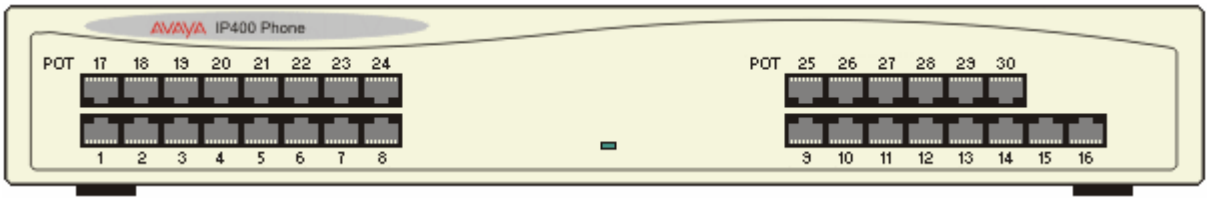

Module Rear

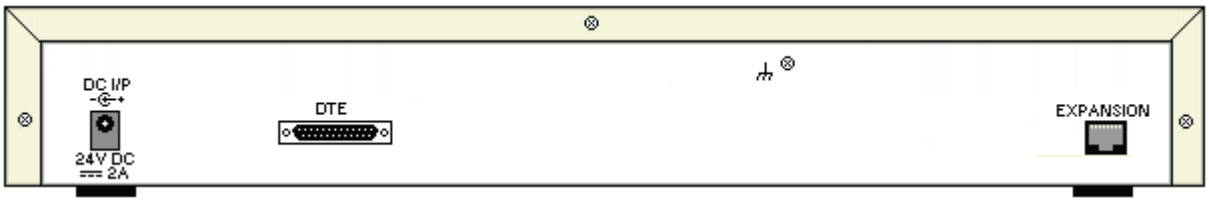

Ports	Description
DC I/P 395	DC power input port. Used for connection of the power lead from an Avaya 40W external power supply unit supplied with the expansion module. A locale specific IEC60320 C7 power cord 36 for the external PSU is required but is not supplied with the module.
DTE 155	25-Way D-Type socket. For Avaya use only.
EXPANSION 398	RJ45 Socket. Used for direct connection to an Expansion port on an IP Office control unit using the Expansion Interconnect cable supplied with the module.
POT 401	RJ45 socket. Used for connection of analog phones. If connected to an out-of-building extension 42, the connection must be made via additional IP Office Barrier Box devices in addition to the buildings primary protection. The module must also be connected to a protective ground.
⏚	Function ground point. Used for connection of a protective or functional ground 205 if required. On older modules where this screw is not present, the top-center cover screw should be used instead. Must be connected if any out-of-building extensions 42 are connected to this module.

Part Codes and Related Equipment

All expansion modules are supplied with a base software level and should be upgraded to match the core software of the control unit in the IP Office system. Expansion modules include an external power supply unit (PSU) and an appropriate interconnect cable. They do not include a locale specific power cord for the external PSU or any phone extension cables.

Item	Variant	Country	SAP Code
IP400 Phone V1	8 Ports	All	700184773
	16 Ports		700184781
	30 Ports		700184799
IEC60320 C7 Power Cord 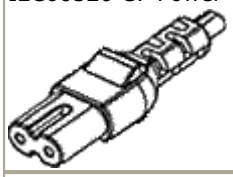	CEE7/16	Europe	700213382
	BS1363	United Kingdom	700213374
	NEMA1-15	America	700213390
	Korea	Korea	700254519
IP400 Rack Mounting Kit		All	700210800

10.9.6 So8

The So8 module is used to add ETSI BRI S0-interface ports to the IP Office system. These ports can then be used for the connection of ISDN devices.

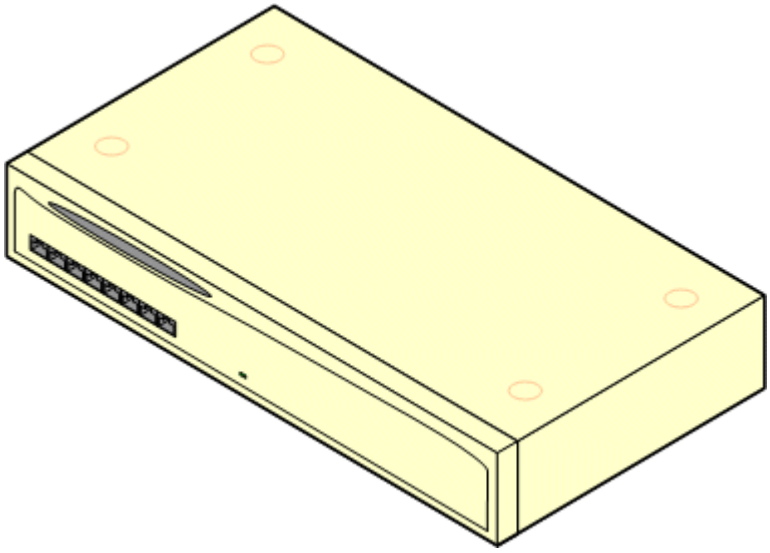

Feature	Details
Supported on	All IP Office control units except Small Office Edition.
Locales	Supported in all IP Office locales 51.
Software Level	IP Office core software level 1.0 minimum. Bin file = nas0-16.bin.
Included	Power supply unit (see below) and Expansion Interconnect cable.
Power Supply	The unit is supplied with an earthed 3-Pin, 60W external power supply unit. The PSU has an integral power cord for connection to the unit's DC I/P socket. A locale specific IEC60320 C13 power cord 36 for the external PSU is required but is not supplied with the unit. • Older units were supplied with a 2-Pin, 40W external power supply unit which used a locale specific locale specific IEC60320 C7 power cord 36.
Mounting	The module is designed as a free-standing module that can be stacked on or under other IP Office modules. The module can be rack mounted in a 19" rack system using the optional IP400 Rack Mounting Kit.
Dimensions	Width: 445mm/17.5". Depth: 245mm/9.7". Height: 71mm/2.8"/2U.
Weight	Unboxed: 2.8Kg/6.3lbs. Boxed: 4.1Kg/9.2lbs.

Module Front

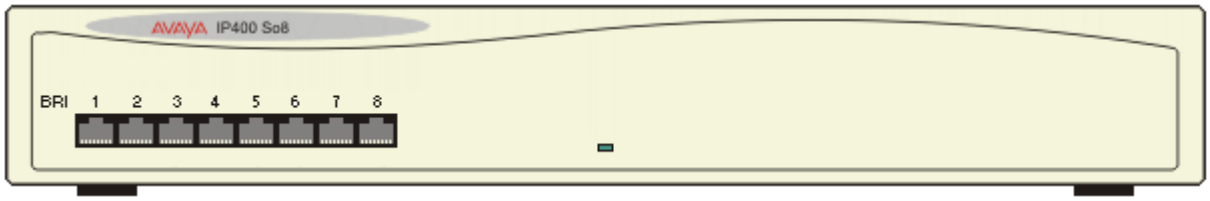

Module Rear

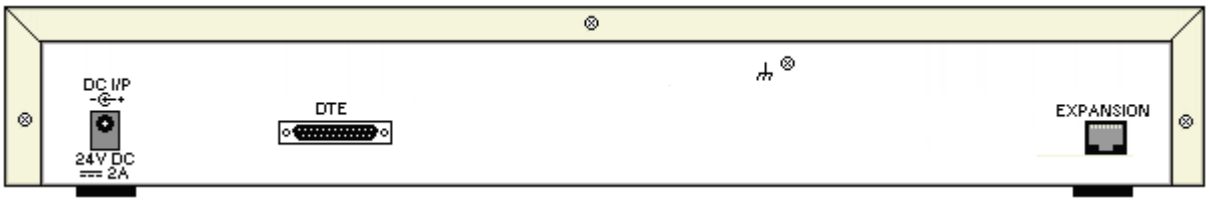

Ports	Description
BRI 393	RJ45 socket. Used for connection of ISDN terminal devices. Note: These ports appear a lines within the IP Office configuration. However they cannot be used for connection to external BRI lines.
DC I/P 395	DC power input port. Used for connection of the power lead from an Avaya 60W external power supply unit supplied with the expansion module. A locale specific IEC60320 C13 power cord 36 for the external PSU is required but is not supplied with the module.
DTE 155	25-Way D-Type socket. For Avaya use only.
EXPANSION 398	RJ45 Socket. Used for direct connection to an Expansion port on an IP Office control unit using the Expansion Interconnect cable supplied with the module.
⏚	Function ground point. Used for connection of a protective or functional ground 41 if required. On older modules where this screw is not present, the top-center cover screw should be used instead.

Part Codes and Related Equipment

All expansion modules are supplied with a base software level and should be upgraded to match the core software of the control unit in the IP Office system. Expansion modules include an external power supply unit (PSU) and an appropriate interconnect cable. They do not include a locale specific power cord for the external PSU or any phone extension cables.

Item	Variant	Country	SAP Code
IP400 So8		All	700185077
IEC60320 C13 Power Cord 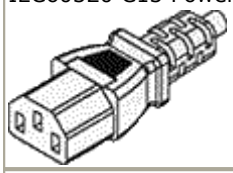	CEE7/7	Europe	700289762
	BS1363	United Kingdom	700289747
	NEMA5-15P	America	700289770
IP400 Rack Mounting Kit		All	700210800

10.10 Mounting Kits

The following mounting kits are available for use with IP Office systems.

10.10.1 IP500 Wall Mounting Kits

IP500, IP500 V2 control units and IP500 external expansion modules can be wall mounted. To do this, a wall mounting kit is required in addition to suitable wall fixings.

In addition to the existing environmental requirements 60 for an IP Office system, the following additional requirements apply when wall mounting a unit:

- The wall surface must be vertical, flat and vibration free. Attachment to temporary walls is not supported.
- Only the screws provided with the mounting kit should used to attach the brackets to the control unit.

The following wall mounting kits exist.

- **IPO IP500 RACK MNTG KIT V3** *(SAP Code 700503160)*
  IPO IP500 RACK MNTG KIT V2 *(SAP Code 700500923)*
  These kits can be used for wall and rack mounting of an IP500 or IP500 V2 control unit and IP500 external expansion modules. The kits incorporates cable routing at the front and rear of the unit. For wall mounted control units it allows orientation of the control unit base card slots to the left or to the right.

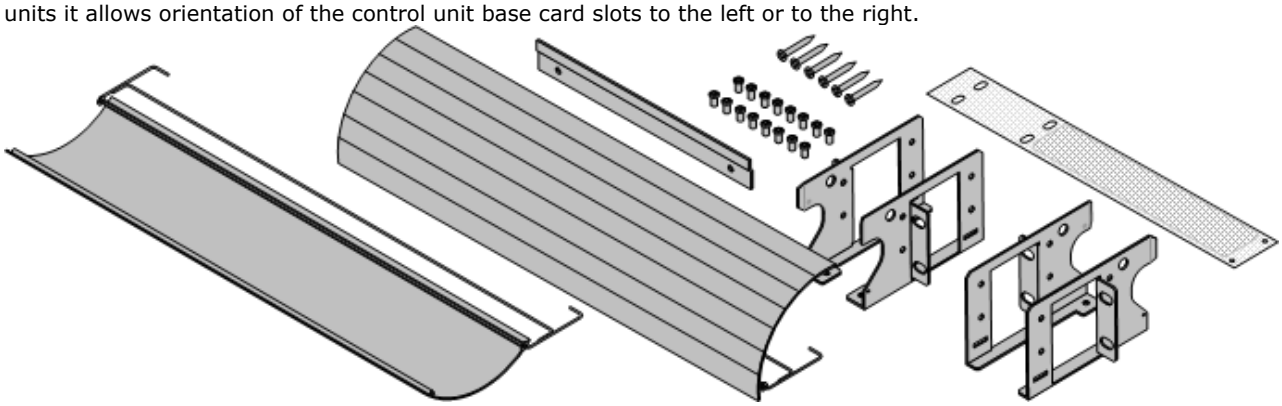

- **IPO IP500 WALL MNTG KIT** *(SAP Code 700430150)*
  This old design of wall mounting kit can be used for wall mounting an IP500 or IP500 V2 control units only. It does not provide any cable routing and requires the control unit to be mounted with the base card slots to the right only.

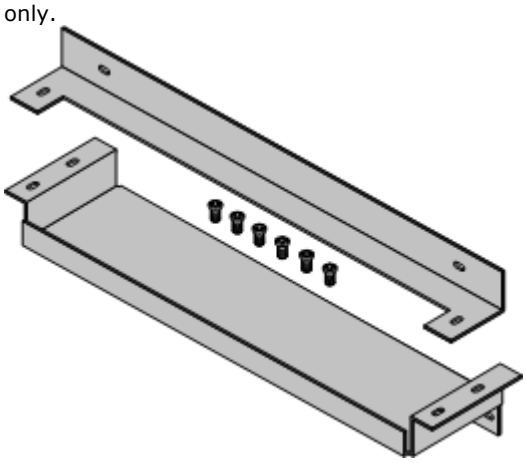

10.10.2 IP500 Rack Mounting Kit

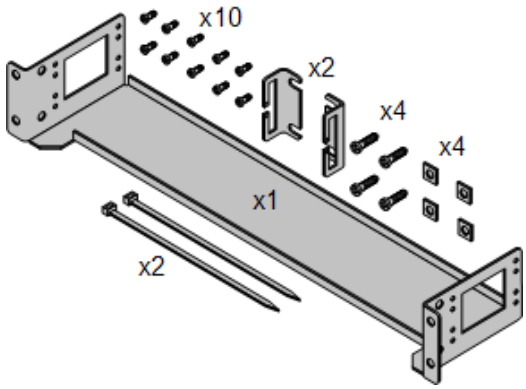

- **IPO IP500 RACK MNTG KIT** *(SAP 700429202)*
  This kit contains all the components required for the rack mounting of a single IP500 V2 control unit, IP500 control unit or IP500 external expansion module. This includes screws for fixing of the brackets to the module, bolts for securing the module in the rack and cable tidy brackets.

10.10.3 IP400 Rack Mounting Kit

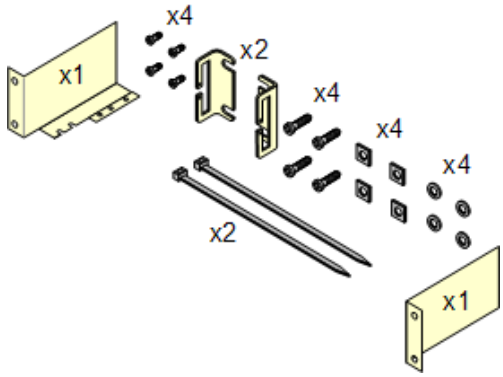

- **IP400 Rack Mounting Kit** *(SAP 700210800)*
  This kit contains all the components required for the rack mounting of a single control unit or expansion module. This includes screws for fixing of the brackets to the module and bolts for securing the module in the rack.

10.10.4 Barrier Box Rack Mounting Kit

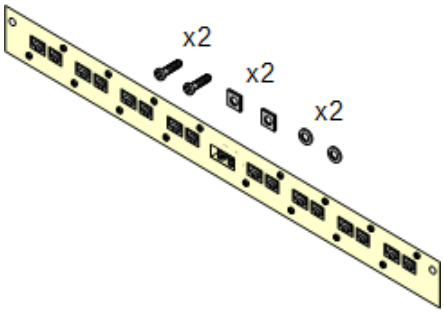

- **Barrier Box Rack Mounting Kit** *(SAP 700293905)*
  Barrier boxes must be used for out-of-building analog phone extensions 42. This bracket allows up to 8 IP Office barrier boxes to be rack mounted and simplifies the number of connections to the protective ground point in the rack. This kit must be used when more than 3 barrier boxes are in use and supports a maximum of 16 barrier boxes for a single external expansion module.

10.11 Phones

IP Office Release 8.1 supports the following phones and phone add-ons. Availability may depend on location and may be subject to local restrictions.

Enhanced Tip and Ring (ETR Port)

These phones are only supported on an ETR6 card in a IP500 V2 systems. They are only supported in IP Office Basic Edition - PARTNER® Mode and IP Office Basic Edition - Quick Mode systems running a North American locale. They are not supported in IP Office Basic Edition - Norstar Mode and IP Office Essential Edition and on any system running A-Law companding.

- **ETR Series:** ETR6 338, ETR6D 338, ETR18 340, ETR18D 340, ETR34D 341 *(ETR 34D phones are limited to a maximum of 2 per card and 4 in total)*
- **PARTNER DECT:** 3910 305, 3920 305

Digital Station (DS Port)

These digital stations connect to the IP Office via DS 395 ports. They are supported by all IP Office modes.

- **1400 Series:** 1403 281, 1408 282, 1416 283
- **9500 Series:** 9504 323, 9508 324

The following additional DS port phones are only supported in IP Office Essential Edition mode:

- **2400 Series:** 2402 290, 2410 291, 2420 292.
- **3800 Series:** 3810 Wireless phone 304 (Not supported on the IP500 and IP500 V2 control unit DS ports).
- **4400 Series:** 4406D 306, 4412D+ 307, 4424D+ 308 (Not supported on the IP500 and IP500 V2 control unit DS ports).
- **5400 Series:** 5402 315, 5410 316, 5420 317.
- **T3 (Upn) Series:** T3 Compact 353, T3 Classic 351, T3 Comfort 352.

Digital Station (TCM Port)

These digital stations connect to the IP500 V2 IP Office system via TCM ports. The following are supported in IP Office Basic Edition - PARTNER® Mode, IP Office Basic Edition - Norstar Mode, IP Office Basic Edition - Quick Mode and IP Office Essential Editions.

- **4100 Series:** 4135, 4136, 4145, 4145EX, 4146, 4146EX - Connection to IP Office TCM ports via a Digital Mobility Solution 366 system.
- **7400 Series:** 7420, 7430, 7434, 7439, 7440, 7444, 7449 - Connection to IP Office TCM ports via a Digital Mobility Solution 366 system.
- **ACU:** Audio Conferencing Unit 337
- **M-Series:** MT7100 342, MT7100N 342, MT7208 343, MT7208N 343, M7310 344, M7310N 344, M7324 345, M7324N 345 .
- **T-Series:** T7000 346, T7100 346, T7208 347, T7316 348, T7316E 349, T7406 350, T7406E 350

Analog Telephones

Analog phones and devices connect to PHONE 401 ports with the IP Office system. However due to the variety of analog phones and device available no guarantee of operation is given. It is the responsibility of the IP Office installer and maintainer to test and verify the operation of proposed analog equipment. Analog message waiting indication (MWI) is only supported with Avaya 6200 Series phones.

- **6200 Series:** 6211, 6219, 6221 *(North America)*.
- **B100 Series:** B149, B159.
- **Interquartz Gemini:** 9330-AV, 9335-AV, 9281-AV *(Europe, Middle East, Africa, Asia-Pacific)*.

IP Telephones

IP Phones (SIP and H323) connect to the IP Office system via the RJ45 LAN or WAN. These device require an Avaya IP Endpoint license and voice compression resources. They are not supported in IP Office Basic Edition - PARTNER® Mode, IP Office Basic Edition - Norstar Mode and IP Office Basic Edition - Quick Mode mode.

H323:

- **1600 Series:** 1603IP/SW 284, 1608 286, 1608-I 286, 1616 288, 1616-I 288
- **3600 Series:** 3616 293, 3620 294, 3626 295, 3641 296, 3645 297
- **3700 Series:** 3701 298, 3711 299 - Connection via DECT base stations. 3720 300, 3725 301, 3740 302, 3749 303 - Connection via DECT R4 base stations.
- **4600 Series:** 4601 309, 4602 310, 4602SW 310, 4610 311, 4610SW 311, 4620 312, 4620SW 312, 4621SW 313, 4625 314.
- **5600 Series:** 5601 318, 5602 319, 5602SW 319, 5610 320, 5620 321, 5621 322.
- **9600 Series:** 9608 325, 9611G 326, 9620L 327, 9620C 327, 9621G 329, 9630G 330, 9640 332, 9640G 332, 9641G 334, 9650 335, 9650C 335.
- **T3 IP Series:** T3 IP Compact 353, T3 IP Classic 351, T3 IP Comfort 352.

SIP:

- **1000 Series:** 1010 279, 1040 279
- **1100 Series:** 1120E 280, 1140E 280
- **1200 Series:** 1220 280, 1230 280
- **B100 Series:** B179.
- **D100 Series:** These DECT handsets (up to 8) use a base station that connects to the IP Office system using a SIP trunk and appear on the IP Office as SIP extensions.
- **Softphone:** Avaya IP Office SIP Softphone application.

10.11.1 1010/1040

The 1000 Series phones are high-quality SIP video phone devices. The 1010 and 1040 phones are supported. Each consists of a main module to which a range of video camera and microphone/speaker devices can be attached. The main module provides outputs for display of video on HD video compatible devices

- The availability of VCM (Voice Compression Module) 50 channels is necessary to support IP telephony. For IP Office 6.0+, these phones require an **Avaya IP Endpoints** 409 license.

1010 Main module with camera, mircrophone and remote control

10.11.2 1120/1140/1220/1230

These Avaya SIP telephones are supported by IP Office Release 6.1 and higher.

- The availability of VCM (Voice Compression Module) 50 channels is necessary to support IP telephony. For IP Office 6.0+, these phones require an **Avaya IP Endpoints** 409 license.

1120 Telephone

1140 Telephone

1120 Telephone

1140 Telephone

10.11.3 1403

This phone is supported with IP Office Release 6.0 and higher.

1603	Feature	1403
	Connects via	DS port.
	IP Office Release	6.0
	Programmable Buttons	✓ 3
	Headset Socket	✗
	Handsfree Speaker/ Microphone	✓/✓
	Message Waiting Lamp	✓
	Display	2 x 16 backlit.
	Supported Add-Ons	None
	Upgradeable Firmware	✓

Fixed Telephony Function Keys				
✓ SPEAKER	✗ HEADSET	✓ MUTE	✓ VOLUME UP	✗ CONTACTS
✗ MESSAGE	✓ HOLD	✓ TRANSFER	✓ VOLUME DOWN	✗ CALL LOG
✓ DROP	✓ REDIAL	✓ CONFERENCE	✓ MENU	

Variant		SAP Code
1403 Telephone	Black	700469927

10.11.4 1408

This phone is supported with IP Office Release 6.0 and higher.

1408	Feature	1408
	Connects via	DS port.
	IP Office Release	6.0+
	Programmable Buttons	✓ 8
	Headset Socket	✓
	Handsfree Speaker/Microphone	✓/✓
	Message Waiting Lamp	✓
	Display	3 x 24 backlit.
	Supported Add-Ons	None.
	Upgradeable Firmware	✓

Fixed Function Keys				
✓ SPEAKER	✓ HEADSET	✓ MUTE	✓ VOLUME UP	✓ CONTACTS
✓ MESSAGE	✓ HOLD	✓ TRANSFER	✓ VOLUME DOWN	✓ CALL LOG
✓ DROP	✓ REDIAL	✓ CONFERENCE	✓ MENU	

Variant		SAP Code
1408 Telephone	Black	700469851

10.11.5 1416

This phone is supported with IP Office Release 6.0 and higher.

1416	Feature	1416
	Connects via	DS port.
	IP Office Release	6.0+
	Programmable Buttons	✓ 16
	Headset Socket	✓
	Handsfree Speaker/ Microphone	✓/✓
	Message Waiting Lamp	✓
	Display	4 x 24 Backlit.
	Supported Add-Ons	DBM32 356 x 3.
	Upgradeable Firmware	✓

Fixed Function Keys				
✓ SPEAKER	✓ HEADSET	✓ MUTE	✓ VOLUME UP	✓ CONTACTS
✓ MESSAGE	✓ HOLD	✓ TRANSFER	✓ VOLUME DOWN	✓ CALL LOG
✓ DROP	✓ REDIAL	✓ CONFERENCE	✓ MENU	

Variant		SAP Code
1416 Telephone	Black	700469869
DBM32 Button Module	Black	700469968

10.11.6 1603

This phone is supported with IP Office 4.2 and higher. Support for the 1603SW model was added in IP Office 5.0. Support for the I variants was added in IP Office Release 6.0 and in 5.0 maintenance releases.

- The availability of VCM (Voice Compression Module) 50 channels is necessary to support IP telephony. For IP Office 6.0+, these phones require an **Avaya IP Endpoints** 409 license.

1603	Feature	1603-I	1603SW-I
	Connects via	IP network.	
	IP Office Release	4.2 Q4 2008 +	5.0+
	Programmable Buttons	✓ 3	
	Headset Socket	✗	
	Handsfree Speaker/ Microphone	✓/✓	
	Message Waiting Lamp	✓	
	PoE Class/Typical Idle Power Consumption	Class 2 (4.3W)	Class 2 (4.3W)
	Display	2 x 16 backlit.	
	Supported Add-Ons	None	
	Upgradeable Firmware	✓	✓
	PC Pass-Through Port/ with Voice Priority	✗/✗	✓/✓

Fixed Telephony Function Keys				
✓ SPEAKER	✗ HEADSET	✓ MUTE	✓ VOLUME UP	✗ CONTACTS
✗ MESSAGE	✓ HOLD	✓ TRANSFER	✓ VOLUME DOWN	✗ CALL LOG
✓ DROP	✓ REDIAL	✓ CONFERENCE	✓ MENU	

Material Description	Code
Phones *(Ethernet cord sold separately. Local power sold separately. PoE adapter sold separately.)*	
1603IP Phone	700415540
1603SW Phone	700458508
1603-I Telephone	700476849
1603SW-I Telephone	700458524
Replacement Wedge Stand	700415615
Accessories	
CAT5 Ethernet Cable (14 ft)	700383326
CAT5 Ethernet Cable (1 ft)	700436710
Power Adapters	
1603 PoE adapter	700415607
Power Adapter for 1600 IP Phones 5V US	700451230
Power Adapter for 1600 IP Phones 5V UK	700451248
Power Adapter for 1600 IP Phones 5V EU	700451255
Power Adapter for 1600 IP Phones 5V ARGENTINA	700451263

Material Description	Code
Power Adapter for 1600 IP Phones 5V KOREA	700451271
Power Adapter for 1600 IP Phones 5V CHINA	700451289
Power Adapter for 1600 IP Phones 5V AUSTRALIA	700451297
Labels	
1603 Paper DESI Labels - Pack of 50 Labels (8.5" x 11")	700415706
1603 Paper DESI Labels - Pack of 50 Labels (A4)	700434210

10.11.7 1608

This phone is supported with IP Office 4.2 and higher. Support for the I variant was added in IP Office Release 6.0 and in 5.0 maintenance releases.

- The availability of VCM (Voice Compression Module) 50 channels is necessary to support IP telephony. For IP Office 6.0+, these phones require an **Avaya IP Endpoints** 409 license.

1608	Feature	1608
	Connects via	IP network.
	IP Office Release	4.2 Q4 2008 +
	Programmable Buttons	✓ 8
	Headset Socket	✓
	Handsfree Speaker/Microphone	✓/✓
	Message Waiting Lamp	✓
	PoE Class/Typical Idle Power Consumption	Class 2 (4.7W)
	Display	3 x 24 backlit.
	Supported Add-Ons	None.
	Upgradeable Firmware	✓
	PC Pass-Through Port/with Voice Priority	✓/✓

Fixed Function Keys				
✓ SPEAKER	✓ HEADSET	✓ MUTE	✓ VOLUME UP	✓ CONTACTS
✓ MESSAGE	✓ HOLD	✓ TRANSFER	✓ VOLUME DOWN	✓ CALL LOG
✓ DROP	✓ REDIAL	✓ CONFERENCE	✓ MENU	

Material Description	Code
Phones *(Ethernet cord sold separately. Local power sold separately. PoE adapter sold separately.)*	
1608 IP Phone	700415557
1608-I IP Phone	700458532
Replacement Stand	700415714
Wall Mounting Kit	700415623
Accessories	
CAT5 Ethernet Cable (14 ft)	700383326
CAT5 Ethernet Cable (1 ft)	700436710
1608 Wall Mount Kit (Includes 1 ft Ethernet cable and screws)	700415623
Power Adapters	
Power Adapter for 1600 IP Phones 5V US	700451230
Power Adapter for 1600 IP Phones 5V UK	700451248
Power Adapter for 1600 IP Phones 5V EU	700451255
Power Adapter for 1600 IP Phones 5V ARGENTINA	700451263
Power Adapter for 1600 IP Phones 5V KOREA	700451271
Power Adapter for 1600 IP Phones 5V CHINA	700451289
Power Adapter for 1600 IP Phones 5V AUSTRALIA	700451297
Labels	

Material Description	Code
1608 Paper DESI Labels - Pack of 50 Labels (8.5" x 11")	700415649
1608 Paper DESI Labels - Pack of 50 Labels (A4)	700434228
Headsets	
HIS Headset Cable for 9600 & 1608/1616 IP Phones	700409881
SupraElite Monaural (One Ear) Voice Tube (HIS cable required)	700343718
SupraElite Monaural (One Ear) Noise Cancelling (HIS cable required)	700343726
SupraElite Monaural (Two Ear) Voice Tube (HIS cable required)	700343734
SupraElite Monaural (Two Ear) Noise Cancelling (HIS cable required)	700343742
AWH-55+ Wireless Headset	700428204
AWH-65+ Wireless Headset - UK	700428212
AWH-65+ Wireless Headset - EURO	700428220
AWH75N Executive Wireless Headset NAR	700446313
AWH75N Executive Wireless Headset EU	700446321
AWH75N Executive Wireless Headset UK	700446339
ABT-35+S Headset & Base - NA	700428170
ABT-35+S Headset & Base - EURO	700428196

10.11.8 1616

This phone is supported with IP Office 4.2 and higher. Support for the I variant was added in IP Office Release 6.0 and in 5.0 maintenance releases.

- The availability of VCM (Voice Compression Module) 50 channels is necessary to support IP telephony. For IP Office 6.0+, these phones require an **Avaya IP Endpoints** 409 license.

1616	Feature	1616
	Connects via	IP network.
	IP Office Release	4.2 Q4 2008+
	Programmable Buttons	✓ 16
	Headset Socket	✓
	Handsfree Speaker/ Microphone	✓/✓
	Message Waiting Lamp	✓
	PoE Class/Typical Idle Power Consumption	Class 2
	Display	4 x 24 Backlit.
	Supported Add-Ons	BM32 357 x 3.
	Upgradeable Firmware	✓
	PC Pass-Through Port/with Voice Priority	✓/✓

Fixed Function Keys				
✓ SPEAKER	✓ HEADSET	✓ MUTE	✓ VOLUME UP	✓ CONTACTS
✓ MESSAGE	✓ HOLD	✓ TRANSFER	✓ VOLUME DOWN	✓ CALL LOG
✓ DROP	✓ REDIAL	✓ CONFERENCE	✓ MENU	

Material Description	Code
Phones *(Ethernet cord sold separately. Local power sold separately. PoE adapter sold separately.)*	
1616 IP Phone	700450190
1616-I IP Phone	700458540
BM32 Button Module for 1616 (includes cable and bridge)	700415573
Replacement Stand	700415722
Accessories	
CAT5 Ethernet Cable (14 ft)	700383326
CAT5 Ethernet Cable (1 ft)	700436710
1616 Wall Mount Kit (Includes 1 ft Ethernet cable and screws)	700415631
Power Adapters	
Power Adapter for 1600 IP Phones 5V US	700451230
Power Adapter for 1600 IP Phones 5V UK	700451248
Power Adapter for 1600 IP Phones 5V EU	700451255
Power Adapter for 1600 IP Phones 5V ARGENTINA	700451263
Power Adapter for 1600 IP Phones 5V KOREA	700451271
Power Adapter for 1600 IP Phones 5V CHINA	700451289
Power Adapter for 1600 IP Phones 5V AUSTRALIA	700451297
Labels	

Material Description	Code
1616/BM32 Paper DESI Labels - Pack of 50 Labels (8.5" x 11")	700415656
1616/BM32 Paper DESI Labels - Pack of 50 Labels (A4)	700434236
Headsets	
HIS Headset Cable for 9600 & 1608/1616 IP Phones	700409881
SupraElite Monaural (One Ear) Voice Tube (HIS cable required)	700343718
SupraElite Monaural (One Ear) Noise Cancelling (HIS cable required)	700343726
SupraElite Monaural (Two Ear) Voice Tube (HIS cable required)	700343734
SupraElite Monaural (Two Ear) Noise Cancelling (HIS cable required)	700343742
AWH-55+ Wireless Headset	700428204
AWH-65+ Wireless Headset - UK	700428212
AWH-65+ Wireless Headset - EURO	700428220
AWH75N Executive Wireless Headset NAR	700446313
AWH75N Executive Wireless Headset EU	700446321
AWH75N Executive Wireless Headset UK	700446339
ABT-35+S Headset & Base - NA	700428170
ABT-35+S Headset & Base - EURO	700428196

10.11.9 2402

In addition to the two physical programmable buttons, the FEATURE key plus 0-9, * and # can be used to access an addition 12 programmable slots.

On IP Office, the 2402D display is not used.

2402D	Feature	Detail
	Connects via	DS port.
	IP Office Release	3.0+
	Programmable Buttons	✓ 2 .
	Headset Socket	✗
	Handsfree Speaker/Microphone	✓/✗
	Message Waiting Lamp	✓
	Display	Not used.
	Supported Add-Ons	None.
	Upgradable Firmware	✓

Standard DCP Phone Keys			
✗ SPEAKER	✗ HEADSET	✓ MUTE	✓ VOLUME UP
✓ MESSAGES	✓ HOLD	✓ TRANSFER	✓ VOLUME DOWN
✓ DROP	✓ REDIAL	✓ CONFERENCE	

Variant		SAP Code
2402D	Multi-Grey	700381973
Replacement Handset	Dark Grey	700203797
Amplified Handset	Dark Grey	700229735
Noisy Location Handset	Dark Grey	700229743
Push to Talk Handset	Dark Grey	700229727

10.11.10 2410

2410D	Feature	2410
	Connects via	DS port.
	IP Office Release	3.0+
	Programmable Buttons	✓ 12. (6 buttons x 2 pages).
	Headset Socket	✓
	Handsfree Speaker/ Microphone	✓/✓
	Message Waiting Lamp	✓
	Display	29 characters x 5 lines. (168 x 80 pixels).
	Supported Add-Ons	None.
	Upgradable Firmware	✓

Standard DCP Phone Keys			
✓ SPEAKER	✓ HEADSET	✓ MUTE	✓ VOLUME UP
✓ MESSAGES	✓ HOLD	✓ TRANSFER	✓ VOLUME DOWN
✓ DROP	✓ REDIAL	✓ CONFERENCE	

Variant		SAP Code
2410	Multi-Grey	700381999
Replacement Handset	Dark Grey	700203797
Amplified Handset	Dark Grey	700229735
Noisy Location Handset	Dark Grey	700229743
Push to Talk Handset	Dark Grey	700229727

10.11.11 2420

2420D	Feature	Details
	Connects via	DS port.
	IP Office Release	1.4+
	Programmable Buttons	✓ 24 (8 buttons x 3 pages)
	Headset Socket	✓
	Handsfree Speaker/ Microphone	✓/✓
	Message Waiting Lamp	✓
	Display	29 characters x 7 lines.
	Supported Add-Ons	EU24*, 201B.
	Upgradable Firmware	✓

Standard DCP Phone Keys			
✓ SPEAKER	✓ HEADSET	✓ MUTE	✓ VOLUME UP
✓ MESSAGES	✓ HOLD	✓ TRANSFER	✓ VOLUME DOWN
✓ DROP	✓ REDIAL	✓ CONFERENCE	

Variant		SAP Code
2420	Multi-Grey	700381585
Replacement Handset	Dark Grey	700203797
Amplified Handset	Dark Grey	700229735
Noisy Location Handset	Dark Grey	700229743
Push to Talk Handset	Dark Grey	700229727
201B Recorder Interface Module		700381635
20B Stand		700381650
EU24*	Multi-Grey	700381817
1151D1 Power Supply	With CAT5 cable.	700434897
1151D2 Power Supply with battery backup.	With CAT5 cable.	700434905
1151D1/1151D2 Power Cord	USA	405362641
	Europe	407786623
	Australia/New Zealand	407786631
	India	407790991
	United Kingdom	407786599
	Argentina	408161453

*When used with an EU24 unit, a 1151 type power supply unit must be used to power the phone.

10.11.12 3616

This is an 802.11b WiFi phone. It connects to the IP Office via a wireless access point and Avaya Voice Priority Processor (AVPP).

- The availability of VCM (Voice Compression Module) 50 channels is necessary to support IP telephony. For IP Office 6.0+, these phones require an **Avaya IP Endpoints** 409 license.

3616	Feature	Detail
	Connects via	IP network.
	IP Office Release	2.0+
	Programmable Buttons	✓ 6.
	Headset Socket	✓
	Message Waiting Lamp	✗
	Upgradable Firmware	✗

Variant	SAP Code
3616 Wireless Phone	700413040
Additional battery pack for 3616	700277387
Desktop charger for 3616.	700412901
Clip for 3616	700413057
3616/3626 Configuration Cradle	700375934

10.11.13 3620

This is an 802.11b WiFi phone. It connects to the IP Office via a wireless access point and Avaya Voice Priority Processor (AVPP).

The 3620 is similar to the 3616 but has been designed for use in healthcare environments. It is waterproof and has a back lit display.

- The availability of VCM (Voice Compression Module) 50 channels is necessary to support IP telephony. For IP Office 6.0+, these phones require an **Avaya IP Endpoints** 409 license.

3616	Feature	Detail
	Connects via	IP network.
	IP Office Release	3.2+
	Programmable Buttons	✓ 6.
	Headset Socket	✓
	Message Waiting Lamp	✗
	Upgradable Firmware	✗

Variant	SAP Code
3620 Wireless Phone	700413065
Additional battery pack.	700277387
Desktop charger.	700412901
Clip	700413057
Configuration Cradle	700375934

10.11.14 3626

This phones is similar to the 3616 in functionality. However the 3626 has a ruggedized construction. This is an 802.11b WiFi phone. It connects to the IP Office via a wireless access point and Avaya Voice Priority Processor (AVPP).

- The availability of VCM (Voice Compression Module) 50 channels is necessary to support IP telephony. For IP Office 6.0+, these phones require an **Avaya IP Endpoints** 409 license.

3626	Feature	Detail
	Connects via	IP network.
	IP Office Release	2.0+
	Programmable Buttons	✓ 6.
	Headset Socket	✓
	Message Waiting Lamp	✗
	Upgradable Firmware	✗

Variant		SAP Code
3626 Wireless Phone		700413024
Additional battery pack for 3626		700277395
Desktop charger for 3626		700412919
3626 Gang changer		700412927
Clip for 3626		700413131
3626 Vinyl case with keypad cover		700412984
3626 Carry case	Yellow	700289309
3626 Carry case with keypad cover	Black	700289317
	Yellow	700289325
3616/3626 Configuration Cradle		700375934

10.11.15 3641

The Avaya 3641 IP Wireless Telephone is a WiFi telephone that runs using H.323.

- The availability of VCM (Voice Compression Module) 50 channels is necessary to support IP telephony. For IP Office 6.0+, these phones require an **Avaya IP Endpoints** 409 license.

The 3641 supports the following features:

- Lightweight innovative design .
- Simple to use.
- 802.11a, 802.11b and 802.11g standard-compatible.
- Transmission type Direct Sequence Spread Spectrum (DSSS).
- FCC certification Part 15.247.
- Management of telephones via DHCP and TFTP.
- Voice encoding G711.
- Wired Equivalent Privacy (WEP) - 40bit and 128 bit. WPA-PSK, WPA2-PSK.
- 5x16 character alphanumeric, plus status indicators.
- 4 hours talk time and 80 hours standby. Extendable with optional battery packs to 8 hours talk time and 160 hours standby.

10.11.16 3645

The Avaya 3645 IP Wireless Telephone is a WiFi telephone that runs using H.323.

- The availability of VCM (Voice Compression Module) 50 channels is necessary to support IP telephony. For IP Office 6.0+, these phones require an **Avaya IP Endpoints** 409 license.

The 3645 supports the following features:

- Lightweight innovative design .
- Simple to use.
- 802.11a, 802.11b and 802.11g standard-compatible.
- Transmission type Direct Sequence Spread Spectrum (DSSS).
- FCC certification Part 15.247.
- Management of telephones via DHCP and TFTP.
- Voice encoding G711.
- Wired Equivalent Privacy (WEP) - 40bit and 128 bit. WPA-PSK, WPA2-PSK.
- 5x16 character alphanumeric, plus status indicators.
- 4 hours talk time and 80 hours standby. Extendable with optional battery packs to 8 hours talk time and 160 hours standby.
- Can be enabled for Push-to-talk (walkie-talkie) feature for broadcast between employees.

10.11.17 3701

The 3701 is an Avaya DECT handset supported on IP Office when using Avaya IP DECT base stations.

3701	Feature	Detail
	Connects via	IP network
	IP Office Release	3.1+
	Programmable Buttons	✗
	Headset Socket	✗
	Handsfree Speaker/Microphone	✓/✗
	Message Waiting Lamp	✓
	Upgradable Firmware	✓

Variant		SAP Code
3701		700346802
Belt Clip		700346885
Phone Charger		700346828
Power Adaptor for Charger	European	700346836
	UK	700346844
	Australia	700378318
8-Phone Gang Charger		700346851
Power Adaptor for Rack Mount Charger	Global	700346869

10.11.18 3711

The 3711 is an Avaya DECT handset supported on IP Office when using Avaya IP DECT base stations.

3711	Feature	Detail
	Connects via	IP network
	IP Office Release	3.1+
	Programmable Buttons	✗
	Headset Socket	✓
	Handsfree Speaker/Microphone	✓/✓
	Message Waiting Lamp	✓
	Upgradable Firmware	✓

Variant		SAP Code
3711		700346810
Belt Clip		700346885
Phone Charger		700346828
Power Adaptor for Charger	European	700346836
	UK	700346844
	Australia	700378318
8-Phone Gang Charger		700346851
Power Adapator for Rack Mount Charger	Global	700346869

10.11.19 3720

This DECT handset is supported with Avaya DECT R4 on IP Office Release 5 and higher.

- The availability of VCM (Voice Compression Module) 50 channels is necessary to support IP telephony. For IP Office 6.0+, these phones require an **Avaya IP Endpoints** 409 license.

10.11.20 3725

This DECT handset is supported with Avaya DECT R4 on IP Office Release 5 and higher.

- The availability of VCM (Voice Compression Module) 50 channels is necessary to support IP telephony. For IP Office 6.0+, these phones require an **Avaya IP Endpoints** 409 license.

10.11.21 3740

The 3740 is supported with Avaya DECT R4 systems and IP Office Release 7.0 and higher.

- The availability of VCM (Voice Compression Module) 50 channels is necessary to support IP telephony. For IP Office 6.0+, these phones require an **Avaya IP Endpoints** 409 license.

10.11.22 3749

The 3746 is a ruggedized DECT handset. It is supported with Avaya DECT R4 systems and IP Office Release 7.0 and higher.

- The availability of VCM (Voice Compression Module) 50 channels is necessary to support IP telephony. For IP Office 6.0+, these phones require an **Avaya IP Endpoints** 409 license.

10.11.23 3810

The phone uses a wireless 900MHz digital protocol to connect to its base station. The base station connects to an IP Office DS port. The base station also requires a power outlet socket. Additional power outlet sockets are required for the phone charger.

This phone is supported in North America (U-Law) only. Not supported on the IP500 Digital Station and IP500 Combination cards.

Depending on coverage overlap, between three and five 3810s can be connected to the same IP Office.

3810	Feature	Detail
	Connects via	DS port.
	IP Office Release	2.1+
	Programmable Buttons	✓ 4.
	Headset Socket	✓
	Handsfree Speaker/ Microphone	✓/✓
	Message Waiting Lamp	✓
	Upgradable Firmware	✗

Item	SAP Code
3810 Set - Includes phone, base station, charger, belt clip and power supply units for charger and base station.	700305105

10.11.24 3910

This single station DECT phone is supported on an IP500 V2 control unit running in Partner Edition mode. The base station uses an ETR port for connection to the IP Office. This phone is no longer available from Avaya and has been superseded by the 3920 305.

10.11.25 3920

This single station DECT phone is supported on an IP500 V2 control unit running in Partner Edition mode. The base station uses an ETR port for connection to the IP Office.

10.11.26 4406

This phone is supported in North America (U-Law) only. Not supported on the IP500 Digital Station and IP500 Combination cards.

4406D+	Feature	Detail
	Connects via	DS port.
	IP Office Release	1.0+
	Programmable Buttons	✓ 6 .
	Headset Socket	✓
	Handsfree Speaker/Microphone	✓/ ✓
	Message Waiting Lamp	✓
	Display	16 characters x 2 lines.
	Supported Add-Ons	None.
	Upgradable Firmware	✗

Standard DCP Phone Keys			
✓ SPEAKER	✗ HEADSET	✓ MUTE	✓ VOLUME UP
✗ MESSAGES	✓ HOLD	✓ TRANSFER	✓ VOLUME DOWN
✗ DROP	✓ REDIAL	✓ CONFERENCE	

Item	SAP Code
4406D+ (Black)	108199027
4406D+ (White)	108199019
Small 4400 Series Stand (Black)	108541194
Stand 4400 Series Stand (White)	108541202

10.11.27 4412

This phone is supported in North America (U-Law) only. Not supported on the IP500 Digital Station and IP500 Combination cards.

Note: A maximum of twenty-seven 4412D telephones are supported on the IP500 DS30 expansion modules and on IP400 DS30 (version 2) expansion module at PCS level 5. Earlier IP400 DS30 expansion modules will only support sixteen of these telephones.

4412D+	Feature	Detail
	Connects via	DS port.
	IP Office Release	1.0+
	Programmable Buttons	✓ 24 (12 /12).
	Headset Socket	✓
	Handsfree Speaker/ Microphone	✓/✓
	Message Waiting Lamp	✓
	Display	24 characters x 2 lines.
	Supported Add-Ons	4450 x 2.
	Upgradable Firmware	✗

Standard DCP Phone Keys			
✓ SPEAKER	✗ HEADSET	✓ MUTE	✓ VOLUME UP
✗ MESSAGES	✓ HOLD	✓ TRANSFER	✓ VOLUME DOWN
✗ DROP	✓ REDIAL	✓ CONFERENCE	

Item		SAP Code
4412D+	Black	108199050
	White	108199043
Large 4400 Series Stand for 4412D+/4424D+	Black	108541269
	White	108541277

10.11.28 4424

This phone is supported in North America (U-Law) only. Not supported on the IP500 Digital Station and IP500 Combination cards.

Note: A maximum of twenty-seven 4424D telephones are supported on the IP500 DS30 expansion modules and on IP400 DS30 (Version 2) expansion module at PCS level 5. Earlier IP400 DS30 expansion modules will only support sixteen of these telephones.

4424D+	Feature	Detail
	Connects via	DS ports.
	IP Office Release	1.0+
	Programmable Buttons	✓ 24 .
	Headset Socket	✓
	Handsfree Speaker/Microphone	✓/✓
	Message Waiting Lamp	✓
	Display	24 characters x 2 lines.
	Supported Add-Ons	4450 356 x 2.
	Upgradeable Firmware	✗

Standard DCP Phone Keys			
✓ SPEAKER	✗ HEADSET	✓ MUTE	✓ VOLUME UP
✗ MESSAGES	✓ HOLD	✓ TRANSFER	✓ VOLUME DOWN
✗ DROP	✓ REDIAL	✓ CONFERENCE	

Item		SAP Code
4424D+	Black	108199084
	White	108199076
Large 4400 Series Stand for 4412D+/4424D+	Black	108541269
	White	108541277
4450 DSS Add-On	Black	108199696
	White	108199407
Small 4400 Series Stand for 4450.	Black	108541194
	White	108541202
Power Supply for 4450		108596412

10.11.29 4601

This phone requires a separate power supply, using either a Avaya 1151D1 or 1151D2 power supply unit and power cord or an 802.3af Power over Ethernet (PoE) source. For RoHS compliance the 4601 has been replaced by the 4601+, however the two phones are functionally the same.

- The availability of VCM (Voice Compression Module) 50 channels is necessary to support IP telephony. For IP Office 6.0+, these phones require an **Avaya IP Endpoints** 409 license.

4601+	Feature	Detail
	Connects via	IP Network.
	IP Office Release	3.0+
	Programmable Buttons	✓ 2
	Headset Socket	✗
	Handsfree Speaker/Microphone	✗/✗
	Message Waiting Lamp	✓
	PoE Class/Typical Idle Power Consumption	3.5W (Class 2)
	Display	None.
	Supported Add-Ons	None.
	Upgradeable Firmware	✓
	PC Pass-Through Port/with Voice Priority	✗/✗

Standard DCP Phone Keys			
✗ SPEAKER	✗ HEADSET	✓ MUTE	✓ VOLUME UP
✓ MESSAGES	✓ HOLD	✓ TRANSFER	✓ VOLUME DOWN
✓ DROP	✓ REDIAL	✓ CONFERENCE	

Variant		SAP Code
4601+	Multi-Grey	700381890
1151D1 Power Supply	With CAT5 cable.	700434897
1151D2 Power Supply with battery backup.	With CAT5 cable.	700434905
1151D1/1151D2 Power Cord	USA	405362641
	Europe	407786623
	Australia and New Zealand	407786631
	India	407790991
	United Kingdom	407786599
	Argentina	408161453
Replacement Handset	Dark Grey	700203797
Amplified Handset	Dark Grey	700229735
Noisy Location Handset	Dark Grey	700229743
Push to Talk Handset	Dark Grey	700229727

10.11.30 4602

These phones are similar in physical appearance and functions. However the 4602SW+ includes a PC data pass-through port which gives priority to phone traffic. The 4602IP is no longer available from Avaya.

The 4602SW+ is the RoHS compliant replacement for the 4602SW which is no longer available.

This phone requires a separate power supply, using either a Avaya 1151D1 or 1151D2 power supply unit and power cord or a 802.3af Power over Ethernet (PoE) source.

- The availability of VCM (Voice Compression Module) 50 channels is necessary to support IP telephony. For IP Office 6.0+, these phones require an **Avaya IP Endpoints** 409 license.

4602/4602SW	Feature	4602IP	4602SW+
	Connects via	IP network.	
	IP Office Release	1.3+	
	Programmable Buttons	✓ 2	
	Headset Socket	✗	
	Handsfree Speaker/Microphone	✓/✗	
	Message Waiting Lamp	✓	
	PoE Class/Typical Idle Power Consumption	3.5W (Class 2)	
	Display	24 characters x 2 lines.	
	Supported Add-Ons	None.	
	Upgradable Firmware	✓	
	PC Pass-Through Port/with Voice Priority	✗/✗	✓/✓

Standard DCP Phone Keys			
✗ SPEAKER	✗ HEADSET	✓ MUTE	✓ VOLUME UP
✓ MESSAGES	✓ HOLD	✓ TRANSFER	✓ VOLUME DOWN
✓ DROP	✓ REDIAL	✓ CONFERENCE	

Variant		SAP Code
4602IP	Multi-Grey	700221260
4602SW+	Multi-Grey	700381916
1151D1 Power Supply	With CAT5 cable.	700434897
1151D2 Power Supply with battery backup.	With CAT5 cable.	700434905
1151D1/1151D2 Power Cord	USA	405362641
	Europe	407786623
	Australia and New Zealand	407786631
	India	407790991
	United Kingdom	407786599
	Argentina	408161453
Replacement Handset	Dark Grey	700203797
Amplified Handset	Dark Grey	700229735
Noisy Location Handset	Dark Grey	700229743
Push to Talk Handset	Dark Grey	700229727

10.11.31 4610

This phone requires a separate power supply, using either a Avaya 1151D1 or 1151D2 power supply unit and power cord or a 802.3af Power over Ethernet (PoE) source.

- The availability of VCM (Voice Compression Module) 50 channels is necessary to support IP telephony. For IP Office 6.0+, these phones require an **Avaya IP Endpoints** 409 license.

4610SW	Feature	Detail
	Connects via	IP network.
	IP Office Release	3.0+
	Programmable Buttons	✓ 24 (6 buttons x 4pages).
	Headset Socket	✓
	Handsfree Speaker/Microphone	✓/✓.
	Message Waiting Lamp	✓
	PoE Class/Typical Idle Power Consumption	4.0W (Class 2)
	Display	29 characters x 5 lines (168 x 80 pixels)
	Supported Add-Ons	None.
	Upgradable Firmware	✓
	PC Pass-Through Port/with Voice Priority	✓/✓

Standard DCP Phone Keys			
✓ SPEAKER	✓ HEADSET	✓ MUTE	✓ ▲ VOLUME UP
✗ MESSAGES	✓ HOLD	✓ TRANSFER	✓ ▼ VOLUME DOWN
✓ DROP	✓ REDIAL	✓ CONFERENCE	

Variant		SAP Code
4610SW	Multi-Grey	700381957
1151D1 Power Supply	With CAT5 cable.	700434897
1151D2 Power Supply with battery backup.	With CAT5 cable.	700434905
1151D1/1151D2 Power Cord.	USA	405362641
	Europe	407786623
	Australia and New Zealand	407786631
	India	407790991
	United Kingdom	407786599
	Argentina	408161453
Replacement Handset	Dark Grey	700203797
Amplified Handset	Dark Grey	700229735
Noisy Location Handset	Dark Grey	700229743
Push to Talk Handset	Dark Grey	700229727

10.11.32 4620

These phones are similar in physical appearance and functions. However the 4620SW's PC data pass-through port gives priority to phone traffic.

This phone requires a separate power supply, using either a Avaya 1151D1 or 1151D2 power supply unit and power cord or a 802.3af Power over Ethernet (PoE) source.

- The availability of VCM (Voice Compression Module) 50 channels is necessary to support IP telephony. For IP Office 6.0+, these phones require an **Avaya IP Endpoints** 409 license.

4620IP/4620SW	Feature	4620IP	4620SW
	Connects via	IP network.	
	IP Office Release	2.0+	
	Programmable Buttons	✓ 24 (12 buttons x 2 pages).	
	Headset Socket	✓	
	Handsfree Speaker/Microphone	✓/✓	
	Message Waiting Lamp	✓	
	PoE Class/Typical Idle Power Consumption	4W (Class 3)	5.9W (Class 3)
	Display	29 characters x 7 lines (168 x 132 pixels)	
	Supported Add-Ons	EU24*, EU24BL*.	
	Upgradeable Firmware	✓	
	PC Pass-Through Port/with Voice Priority	✓/✗	✓/✓

Standard DCP Phone Keys			
✓ SPEAKER	✓ HEADSET	✓ MUTE	✓ VOLUME UP
✗ MESSAGES	✓ HOLD	✓ TRANSFER	✓ VOLUME DOWN
✓ DROP	✓ REDIAL	✓ CONFERENCE	

Variant		SAP Code
4620IP	Multi-Grey	700212186
4620SW	Multi-Grey	700259674
Replacement Handset	Dark Grey	700203797
Amplified Handset	Dark Grey	700229735
Noisy Location Handset	Dark Grey	700229743
Push to Talk Handset	Dark Grey	700229727
EU24	Multi-Grey	700381817
EU24BL	Multi-Grey	700381544
1151D1 Power Supply	With CAT5 cable.	700434897
1151D2 Power Supply with battery backup.	With CAT5 cable.	700434905
1151D1/1151D2 Power Cord	USA	405362641
	Europe	407786623
	Australia/New Zealand	407786631
	India	407790991
	United Kingdom	407786599
	Argentina	408161453

*When used with an EU24 or EU24BL unit, a 1151 type power supply unit must be used to power the phone.

10.11.33 4621

The 4621 is similar in physical appearance and function to the 4620SW. However the 4621SW includes a backlight function for the screen.

This phone requires a separate power supply, using either a Avaya 1151D1 or 1151D2 power supply unit and power cord or a 802.3af Power over Ethernet (PoE) source.

- The availability of VCM (Voice Compression Module) 50 channels is necessary to support IP telephony. For IP Office 6.0+, these phones require an **Avaya IP Endpoints** 409 license.

4621SW	Feature	4621SW
	Connects via	IP network.
	IP Office Release	3.0(577)+
	Programmable Buttons	✓ 24 (12 buttons x 2 pages).
	Headset Socket	✓
	Handsfree Speaker/Microphone	✓/✓
	Message Waiting Lamp	✓
	PoE Class/Typical Idle Power Consumption	5.75W (Class 2)
	Display	29 characters x 7 lines (168 x 132 pixels)
	Supported Add-Ons	EU24*, EU24BL*.
	Upgradeable Firmware	✓
	PC Pass-Through Port/with Voice Priority	✓/✓

Standard DCP Phone Keys			
✓ SPEAKER	✓ HEADSET	✓ MUTE	✓ ▲ VOLUME UP
✗ MESSAGES	✓ HOLD	✓ TRANSFER	✓ ▼ VOLUME DOWN
✓ DROP	✓ REDIAL	✓ CONFERENCE	

Variant		SAP Code
4621SW	Multi-Grey	700345192
Replacement Handset	Dark Grey	700203797
Amplified Handset	Dark Grey	700229735
Noisy Location Handset	Dark Grey	700229743
Push to Talk Handset	Dark Grey	700229727
EU24*	Multi-Grey	700381817
EU24BL*	Multi-Grey	700381544
1151D1 Power Supply	With CAT5 cable.	700434897
1151D2 Power Supply with battery backup.	With CAT5 cable.	700434905
1151D1/1151D2 Power Cord	USA	405362641
	Europe	407786623
	Australia/New Zealand	407786631
	India	407790991
	United Kingdom	407786599
	Argentina	408161453

*When used with an EU24 or EU24BL unit, a 1151 type power supply unit must be used to power the phone.

10.11.34 4625

The 4625 is similar in physical appearance and function to the 4621SW. However the 4625SW includes a color display.

This phone requires a separate power supply, using either a Avaya 1151D1 or 1151D2 power supply unit and power cord or a 802.3af Power over Ethernet (PoE) source.

- The availability of VCM (Voice Compression Module) 50 channels is necessary to support IP telephony. For IP Office 6.0+, these phones require an **Avaya IP Endpoints** 409 license.

4625SW	Feature	4625SW
	Connects via	IP network.
	IP Office Release	3.2+
	Programmable Buttons	✓ 24 (12 buttons x 2 pages).
	Headset Socket	✓
	Handsfree Speaker/Microphone	✓/✓
	Message Waiting Lamp	✓
	PoE Class/Typical Idle Power Consumption	6.45W (Class 3)
	Display	29 characters x 7 lines (168 x 132 pixels)
	Supported Add-Ons	EU24*, EU24BL*.
	Upgradeable Firmware	✓
	PC Pass-Through Port/with Voice Priority	✓/✓

Standard DCP Phone Keys			
✓ SPEAKER	✓ HEADSET	✓ MUTE	✓ VOLUME UP
✗ MESSAGES	✓ HOLD	✓ TRANSFER	✓ VOLUME DOWN
✓ DROP	✓ REDIAL	✓ CONFERENCE	

Variant		SAP Code
4625SW	Multi-Grey	700381551
Replacement Handset	Dark Grey	700203797
Amplified Handset	Dark Grey	700229735
Noisy Location Handset	Dark Grey	700229743
Push to Talk Handset	Dark Grey	700229727
EU24*	Multi-Grey	700381817
EU24BL*	Multi-Grey	700381544
1151D1 Power Supply	With CAT5 cable.	700434897
1151D2 Power Supply with battery backup.	With CAT5 cable.	700434905
1151D1/1151D2 Power Cord	USA	405362641
	Europe	407786623
	Australia/New Zealand	407786631
	India	407790991
	United Kingdom	407786599
	Argentina	408161453

*When used with an EU24 or EU24BL unit, a 1151 type power supply unit must be used to power the phone.

10.11.35 5402

This phone is similar in physical appearance and functions to the 2402D. However the 5402 phone is only supported on IP Office.

In addition to the two physical programmable buttons, the FEATURE key plus 0-9, * and # can be used to access an addition 12 programmable slots.

5402	Feature	Detail
	Connects via	DS port.
	IP Office Release	3.0+.
	Programmable Buttons	✓ 2 *.
	Headset Socket	✗
	Handsfree Speaker/Microphone	✓/✗
	Message Waiting Lamp	✓
	Display	24 characters x 2 lines.
	Supported Add-Ons	None.
	Upgradable Firmware	✓

Standard DCP Phone Keys			
✗ SPEAKER	✗ HEADSET	✓ MUTE	✓ VOLUME UP
✓ MESSAGES	✓ HOLD	✓ TRANSFER	✓ VOLUME DOWN
✓ DROP	✓ REDIAL	✓ CONFERENCE	

Variant		SAP Code
5402	Multi-Grey	700345309
Replacement Handset	Dark Grey	700203797
Amplified Handset	Dark Grey	700229735
Noisy Location Handset	Dark Grey	700229743
Push to Talk Handset	Dark Grey	700229727

10.11.36 5410

This phone is similar in physical appearance and functions to the 2410. However the 5410 phone is only supported on IP Office.

5410	Feature	Detail
	Connects via	DS port.
	IP Office Release	3.0+
	Programmable Buttons	✓ 12 (6 buttons x 2 pages).
	Headset Socket	✓
	Handsfree Speaker/ Microphone	✓/✓
	Message Waiting Lamp	✓
	Display	29 characters x 5 lines. (168 x 80 pixels).
	Supported Add-Ons	None.
	Upgradable Firmware	✓

Standard DCP Phone Keys			
✓ SPEAKER	✓ HEADSET	✓ MUTE	✓ ▲ VOLUME UP
✓ MESSAGES	✓ HOLD	✓ TRANSFER	✓ ▼ VOLUME DOWN
✓ DROP	✓ REDIAL	✓ CONFERENCE	

Variant		SAP Code
5410	Multi-Grey	700345291
5410 (RoHS compliant)	Multi-Grey	700382005
Replacement Handset	Dark Grey	700203797
Amplified Handset	Dark Grey	700229735
Noisy Location Handset	Dark Grey	700229743
Push to Talk Handset	Dark Grey	700229727

10.11.37 5420

This phone is similar in physical appearance and functions to the 2420. However the 5420 is only supported on IP Office.

5420D	Feature	Detail
	Connects via	DS port.
	IP Office Release	3.0+
	Programmable Buttons	✓ 24 (8 buttons x 3 pages)
	Headset Socket	✓
	Handsfree Speaker/Microphone	✓/✓
	Message Waiting Lamp	✓
	Display	29 characters x 7 lines.
	Supported Add-Ons	EU24*, 201B.
	Upgradable Firmware	✓

Standard DCP Phone Keys			
✓ SPEAKER	✓ HEADSET	✓ MUTE	✓ ▲ VOLUME UP
✓ MESSAGES	✓ HOLD	✓ TRANSFER	✓ ▼ VOLUME DOWN
✓ DROP	✓ REDIAL	✓ CONFERENCE	

Variant		SAP Code
5420D	Multi-Grey	700339823
5420D (RoHS compliant)	Multi-Grey	700381627
Replacement Handset	Dark Grey	700203797
Amplified Handset	Dark Grey	700229735
Noisy Location Handset	Dark Grey	700229743
Push to Talk Handset	Dark Grey	700229727
201B Recorder Interface Module		700381635
20B Stand		700381650
EU24*	Multi-Grey	700381817
1151D1 Power Supply	With CAT5 cable.	700434897
1151D2 Power Supply with battery backup.	With CAT5 cable.	700434905
1151D1/1151D2 Power Cord	USA	405362641
	Europe	407786623
	Australia/New Zealand	407786631
	India	407790991
	United Kingdom	407786599
	Argentina	408161453

*When used with an EU24 unit, a 1151 type power supply unit must be used to power the phone.

10.11.38 5601

This phone is similar in physical appearance and functions to the 4601. However the 5601 phone is only supported on IP Office. The 5601+ is the RoHS compliant version that has replaced the previous 5601 IP model but is otherwise the same.

This phone requires a separate power supply, using either a Avaya 1151D1 or 1151D2 power supply unit and power cord or a 802.3af Power over Ethernet (PoE) source.

- The availability of VCM (Voice Compression Module) 50 channels is necessary to support IP telephony. For IP Office 6.0+, these phones require an **Avaya IP Endpoints** 409 license.

5601	Feature	Detail
	Connects via	IP Network.
	IP Office Release	3.0+
	Programmable Buttons	✓ 2
	Headset Socket	✗
	Handsfree Speaker/Microphone	✗/✗
	Message Waiting Lamp	✓
	PoE Class/Typical Idle Power Consumption	3.5W (Class 2)
	Display	None.
	Supported Add-Ons	None.
	Upgradeable Firmware	✓
	PC Pass-Through Port/with Voice Priority	✗/✗

Standard DCP Phone Keys			
✗ SPEAKER	✗ HEADSET	✓ MUTE	✓ VOLUME UP
✓ MESSAGES	✓ HOLD	✓ TRANSFER	✓ VOLUME DOWN
✓ DROP	✓ REDIAL	✓ CONFERENCE	

Variant		SAP Code
5601IP	Multi-Grey	700345366
5601+ (RoHS compliant)	Multi-Grey	700381908
Replacement Handset	Dark Grey	700203797
Amplified Handset	Dark Grey	700229735
Noisy Location Handset	Dark Grey	700229743
Push to Talk Handset	Dark Grey	700229727
1151D1 Power Supply	With CAT5 cable.	700434897
1151D2 Power Supply with battery backup.	With CAT5 cable.	700434905
1151D1/1151D2 Power Cord	USA	405362641
	Europe	407786623
	Australia/New Zealand	407786631
	India	407790991
	United Kingdom	407786599
	Argentina	408161453

10.11.39 5602

The 5602IP and 5602SW phones are similar in physical appearance and functions. However the 5602SW includes a PC data pass-through port which gives priority to phone traffic. The 5602IP is no longer available from Avaya. The 5602SW+ is the RoHS compliant version that has replaced the previous 5602SW model but is otherwise the same.

This phone requires a separate power supply, using either a Avaya 1151D1 or 1151D2 power supply unit and power cord or a 802.3af Power over Ethernet (PoE) source.

- The availability of VCM (Voice Compression Module) 50 channels is necessary to support IP telephony. For IP Office 6.0+, these phones require an **Avaya IP Endpoints** 409 license.

5602IP/5602SW	Feature	5602IP	5602SW
	Connects via	IP network.	
	IP Office Release	3.0+	
	Programmable Buttons	✓ 2	
	Headset Socket	✗	
	Handsfree Speaker/Microphone	✓/✗	
	Message Waiting Lamp	✓	
	PoE Class/Typical Idle Power Consumption	4.1W (Class 2)	
	Display	24 characters x 2 lines.	
	Supported Add-Ons	None.	
	Upgradable Firmware	✓	
	PC Pass-Through Port/with Voice Priority	✗/✗	✓/✓

Standard DCP Phone Keys			
✗ SPEAKER	✗ HEADSET	✓ MUTE	✓ VOLUME UP
✓ MESSAGES	✓ HOLD	✓ TRANSFER	✓ VOLUME DOWN
✓ DROP	✓ REDIAL	✓ CONFERENCE	

Variant		SAP Code
5602IP	Multi-Grey	700345341
5602SW	Multi-Grey	700381825
5602SW+ (RoHS compliant)	Multi-Grey	700381932
Replacement Handset	Dark Grey	700203797
Amplified Handset	Dark Grey	700229735
Noisy Location Handset	Dark Grey	700229743
Push to Talk Handset	Dark Grey	700229727
EU24	Multi-Grey	700381817
EU24BL	Multi-Grey	700381544
1151D1 Power Supply	With CAT5 cable.	700434897
1151D2 Power Supply with battery backup.	With CAT5 cable.	700434905
1151D1/1151D2 Power Cord	USA	405362641
	Europe	407786623
	Australia/New Zealand	407786631
	India	407790991
	United Kingdom	407786599
	Argentina	408161453

10.11.40 5610

This phone requires a separate power supply, using either a Avaya 1151D1 or 1151D2 power supply unit and power cord or a 802.3af Power over Ethernet (PoE) source.

- The availability of VCM (Voice Compression Module) 50 channels is necessary to support IP telephony. For IP Office 6.0+, these phones require an **Avaya IP Endpoints** 409 license.

5610	Feature	Detail
	Connects via	IP network.
	IP Office Release	3.0+
	Programmable Buttons	✓ 24 (6 buttons x 4 pages).
	Headset Socket	✓
	Handsfree Speaker/Microphone	✓/✓.
	Message Waiting Lamp	✓
	PoE Class/Typical Idle Power Consumption	5W (Class 2)
	Display	29 characters x 5 lines (168 x 80 pixels)
	Supported Add-Ons	None.
	Upgradable Firmware	✓
	PC Pass-Through Port/with Voice Priority	✓/✓

Standard DCP Phone Keys			
✓ SPEAKER	✓ HEADSET	✓ MUTE	✓ VOLUME UP
✗ MESSAGES	✓ HOLD	✓ TRANSFER	✓ VOLUME DOWN
✓ DROP	✓ REDIAL	✓ CONFERENCE	

Variant		SAP Code
5610SW	Multi-Grey	700345333
5610SW (RoHS compliant)	Multi-Grey	700381965
Replacement Handset	Dark Grey	700203797
Amplified Handset	Dark Grey	700229735
Noisy Location Handset	Dark Grey	700229743
Push to Talk Handset	Dark Grey	700229727
EU24	Multi-Grey	700381817
EU24BL	Multi-Grey	700381544
1151D1 Power Supply	With CAT5 cable.	700434897
1151D2 Power Supply with battery backup.	With CAT5 cable.	700434905
1151D1/1151D2 Power Cord	USA	405362641
	Europe	407786623
	Australia/New Zealand	407786631
	India	407790991
	United Kingdom	407786599
	Argentina	408161453

10.11.41 5620

This phone is similar in physical appearance and functions to the 4620SW. It is no longer available from Avaya, having been replaced by the 5621.

This phone requires a separate power supply, using either a Avaya 1151D1 or 1151D2 power supply unit and power cord or a 802.3af Power over Ethernet (PoE) source.

- The availability of VCM (Voice Compression Module) 50 channels is necessary to support IP telephony. For IP Office 6.0+, these phones require an **Avaya IP Endpoints** 409 license.

5620	Feature	5620IP
	Connects via	IP network.
	IP Office Release	3.0+
	Programmable Buttons	✓ 24 (12 buttons x 2 pages).
	Headset Socket	✓
	Handsfree Speaker/Microphone	✓/✓
	Message Waiting Lamp	✓
	PoE Class/Typical Idle Power Consumption	5.9W (Class 3)
	Display	29 characters x 7 lines (168 x 132 pixels)
	Supported Add-Ons	EU24*, EU24BL*.
	Upgradeable Firmware	✓
	PC Pass-Through Port/with Voice Priority	✓/✓

Standard DCP Phone Keys			
✓ SPEAKER	✓ HEADSET	✓ MUTE	✓ VOLUME UP
✗ MESSAGES	✓ HOLD	✓ TRANSFER	✓ VOLUME DOWN
✓ DROP	✓ REDIAL	✓ CONFERENCE	

Variant		SAP Code
5620IP	Multi-Grey	700339815
Replacement Handset	Dark Grey	700203797
Amplified Handset	Dark Grey	700229735
Noisy Location Handset	Dark Grey	700229743
Push to Talk Handset	Dark Grey	700229727
EU24*	Multi-Grey	700381817
EU24BL*	Multi-Grey	700381544
1151D1 Power Supply	With CAT5 cable.	700434897
1151D2 Power Supply with battery backup.	With CAT5 cable.	700434905
1151D1/1151D2 Power Cord	USA	405362641
	Europe	407786623
	Australia/New Zealand	407786631
	India	407790991
	United Kingdom	407786599
	Argentina	408161453

*When used with an EU24 or EU24BL unit, a 1151 type power supply unit must be used to power the phone.

10.11.42 5621

This phone is similar in physical appearance and functions to the 4621SW.

This phone requires a separate power supply, using either a Avaya 1151D1 or 1151D2 power supply unit and power cord or a 802.3af Power over Ethernet (PoE) source.

- The availability of VCM (Voice Compression Module) 50 channels is necessary to support IP telephony. For IP Office 6.0+, these phones require an **Avaya IP Endpoints** 409 license.

5621	Feature	5620IP
	Connects via	IP network.
	IP Office Release	3.2+
	Programmable Buttons	✓ 24 (12 buttons x 2 pages).
	Headset Socket	✓
	Handsfree Speaker/Microphone	✓/✓
	Message Waiting Lamp	✓
	PoE Class/Typical Idle Power Consumption	5.9W (Class 3)
	Display	29 characters x 7 lines (168 x 132 pixels)
	Supported Add-Ons	EU24*, EU24BL*.
	Upgradeable Firmware	✓
	PC Pass-Through Port/with Voice Priority	✓/✓

Standard DCP Phone Keys			
✓ SPEAKER	✓ HEADSET	✓ MUTE	✓ VOLUME UP
✗ MESSAGES	✓ HOLD	✓ TRANSFER	✓ VOLUME DOWN
✓ DROP	✓ REDIAL	✓ CONFERENCE	

Variant		SAP Code
5621SW	Multi-Grey	700345982
5621SW (RoHS compliant)	Multi-Grey	700385982
Replacement Handset	Dark Grey	700203797
Amplified Handset	Dark Grey	700229735
Noisy Location Handset	Dark Grey	700229743
Push to Talk Handset	Dark Grey	700229727
EU24*	Multi-Grey	700381817
EU24BL*	Multi-Grey	700381544
1151D1 Power Supply	With CAT5 cable.	700434897
1151D2 Power Supply with battery backup.	With CAT5 cable.	700434905
1151D1/1151D2 Power Cord	USA	405362641
	Europe	407786623
	Australia/New Zealand	407786631
	India	407790991
	United Kingdom	407786599
	Argentina	408161453

*When used with an EU24 or EU24BL unit, a 1151 type power supply unit must be used to power the phone.

10.11.43 9504

9500 Series phones are supported by IP Office Release 7.0 and higher.

The phones provide 4 physical buttons with red and green LEDs. These can be used for up to 12 programmable features.

Variant		SAP Code
9504 Telephone	Charcoal Grey	700500206
BM12 Button Module	Charcoal Grey	700480643

10.11.44 9508

9500 Series phones are supported by IP Office Release 7.0 and higher.

The phones provide 8 physical buttons with red and green LEDs. These can be used for up to 24 programmable features. The phones support the addition of up to 3 BM12 button modules supporting an additional 24 programmable features (using 12 buttons) per module.

Variant		SAP Code
9508 Telephone	Charcoal Grey	700500207
BM12 Button Module	Charcoal Grey	700480643

10.11.45 9608

- This phone is supported by the IP Office Release 8.0 Q1 2012 Service Pack and higher. The voice activated dialing and USB features are not supported.
- The previous restrictions against using the IP Office system as the HTTP file server for this type of phone have been removed.

The phones supports 24 programmable buttons. These can be used for call appearance functions and other IP Office features.

This phone can be used with up to 3 x BM12 button module. Each module provides an additional 24 programmable buttons. Attaching button modules may change the phones PoE class and may require a separate power supply.

If not being powered by PoE, these telephones do not support the former 1151 and 1152 series of Avaya single phone power supply units. Instead an Avaya Single Port PoE injector (SPPOE-1A) should be used.

Variant		SAP Code
9608 Telephone	Charcoal Grey	700480585
Single Port PoE Injector (SPPOE-1A)	–	700500725
BM12 Button Module	Charcoal Grey	700480643

10.11.46 9611G

- This phone is supported by the IP Office Release 8.0 Q1 2012 Service Pack and higher. The voice activated dialing and USB features are not supported.
- The previous restrictions against using the IP Office system as the HTTP file server for this type of phone have been removed.

The phones supports 24 programmable buttons. These can be used for call appearance functions and other IP Office features.

This phone can be used with up to 3 x BM12 button module. Each module provides an additional 24 programmable buttons. Attaching button modules may change the phones PoE class and may require a separate power supply.

If not being powered by PoE, these telephones do not support the former 1151 and 1152 series of Avaya single phone power supply units. Instead an Avaya Single Port PoE injector (SPPOE-1A) should be used.

Variant		SAP Code
9611 Telephone	Charcoal Grey	700480593
Single Port PoE Injector (SPPOE-1A)	–	700500725
BM12 Button Module	Charcoal Grey	700480643

10.11.47 9620L, 9620C

These phones are supported on IP500 and IP500 V2 systems running IP Office Release 6.0 and higher. The phones are supplied with a two-position stand.

- The availability of VCM (Voice Compression Module) 50 channels is necessary to support IP telephony. For IP Office 6.0+, these phones require an **Avaya IP Endpoints** 409 license.
- The voice activated dialing and USB features are not supported.
- For IP Office Release 6.1, these phones are supported running SIP software. When that is the case, the IP Office or IP Office Manager should not be used as the file server for the phone. Avaya SIP phones require an Avaya IP Endpoints license.
- The Class requirement of PoE powered phones may be increased if the phone is used with additional equipment such as a button module.

9620	Feature	9620L	9620C
	Connects via	IP network.	IP network.
	IP Office Release	6.0+	6.0+
	Programmable Buttons	✓ Soft buttons.	✓ Soft buttons.
	Headset Socket	✓	✓
	Handsfree Speaker/ Microphone	✓/✓	✓/✓
	Message Waiting Lamp	✓	✓
	PoE Class/Typical Idle Power Consumption	Class 1	Class 1
	Display	1/4 VGA Greyscale	1/4 VGA Color
	Supported Add-Ons	–	–
	Upgradeable Firmware	✓	✓
	PC Pass-Through Port/with Voice Priority	✓/✓	✓/✓

Fixed Function Keys				
✓ SPEAKER	✓ HEADSET	✓ MUTE	✓ VOLUME UP	✓ CONTACTS
✓ MESSAGE	✗ HOLD	✗ TRANSFER	✓ VOLUME DOWN	✓ CALL LOG
✗ DROP	✗ REDIAL	✗ CONFERENCE	✓ MENU	✗ FORWARD

Functions for fixed functions keys not present are accessible through display menu soft key functions.

Variant		SAP Code
9620L Telephone	Charcoal Grey	700461197
9620C Telephone	Charcoal Grey	700461205
9620L without faceplate	–	700461239
9620C without faceplate	–	700461247
Replacement Stand	Silver	700416555
Wedge Stand	Charcoal Grey	700383870
Wall Mounting Plate	Charcoal Grey	700383375
Gigabit Adapter	–	700383771
Bluetooth Adapter	–	700383789

Replacement Handset		700416548
Amplified Speech Handset		700446370
Replacement Handset Cord (9 feet)		700383318
Replacement Handset Cord (25 feet)		700383821
Replacement Line Cord		700383326

10.11.48 9621G

- This phone is supported by the IP Office Release 8.0 Q1 2012 Service Pack and higher. The voice activated dialing and USB features are not supported.
- The previous restrictions against using the IP Office system as the HTTP file server for this type of phone have been removed.

The phones support 24 programmable buttons which are displayed as touchscreen options. These can be used for call appearance functions and other IP Office features. In addition the phone supports a home screen on which the user can add up to 8 icons for programmable functions in addition to those icons present through installation configuration.

These phones do not support any button modules.

10.11.49 9630G

These phones are supported on IP500 and IP500 V2 systems running IP Office Release 6.0 and higher. The phones are supplied with a two-position stand.

- The availability of VCM (Voice Compression Module) 50 channels is necessary to support IP telephony. For IP Office 6.0+, these phones require an **Avaya IP Endpoints** 409 license.
- The voice activated dialing and USB features are not supported.
- For IP Office Release 6.1, these phones are supported running SIP software. When that is the case, the IP Office or IP Office Manager should not be used as the file server for the phone. Avaya SIP phones require an Avaya IP Endpoints license.
- The Class requirement of PoE powered phones may be increased if the phone is used with additional equipment such as a button module.

9630	Feature	9630
	Connects via	IP network.
	IP Office Release	6.0+
	Programmable Buttons	✓
	Headset Socket	✓
	Handsfree Speaker/Microphone	✓/✓
	Message Waiting Lamp	✓
	PoE Class/Typical Idle Power Consumption	Class 2
	Display	1/3 VGA Greyscale
	Supported Add-Ons	SMB24 362 x 3.
	Upgradeable Firmware	✓
	PC Pass-Through Port/with Voice Priority	✓/✓

Fixed Function Keys				
✓ SPEAKER	✓ HEADSET	✓ MUTE	✓ VOLUME UP	✓ CONTACTS
✓ MESSAGE	✗ HOLD	✗ TRANSFER	✓ VOLUME DOWN	✓ CALL LOG
✗ DROP	✗ REDIAL	✗ CONFERENCE	✓ MENU	✓ FORWARD

Functions for fixed functions keys not present are accessible through display menu soft key functions.

Variant		SAP Code
9630G Telephone	Charcoal Grey	700405673
9630G without faceplate	–	700408602
SMB24 Button Module	Charcoal Grey	700462518
SMB24 without faceplate	–	700462526
SMB24 Replacement Stand	Silver	700416571
Replacement Stand	Silver	700416563
Wedge Stand	Charcoal Grey	700383888
Wall Mounting Plate	Charcoal Grey	700383383
Gigabit Adapter	–	700383771
Bluetooth Adapter	–	700383789
Replacement Handset		700416548
Amplified Speech Handset		700446370
Replacement Handset Cord (9 feet)		700383318

Replacement Handset Cord (25 feet)		700383821
Replacement Line Cord		700383326

10.11.50 9640, 9640G

These phones are supported on IP500 and IP500 V2 systems running IP Office Release 6.0 and higher. The phones are supplied with a two-position stand.

- The availability of VCM (Voice Compression Module) 50 channels is necessary to support IP telephony. For IP Office 6.0+, these phones require an **Avaya IP Endpoints** 409 license.
- The voice activated dialing and USB features are not supported.
- For IP Office Release 6.1, these phones are supported running SIP software. When that is the case, the IP Office or IP Office Manager should not be used as the file server for the phone. Avaya SIP phones require an Avaya IP Endpoints license.
- The Class requirement of PoE powered phones may be increased if the phone is used with additional equipment such as a button module.

9640	Feature	9640
	Connects via	IP network.
	IP Office Release	6.0+
	Programmable Buttons	✓
	Headset Socket	✓
	Handsfree Speaker/ Microphone	✓/✓
	Message Waiting Lamp	✓
	PoE Class/Typical Idle Power Consumption	Class 2
	Display	1/3 VGA Greyscale
	Supported Add-Ons	SMB24 362 x 3.
	Upgradeable Firmware	✓
	PC Pass-Through Port/ with Voice Priority	✓/✓

Fixed Function Keys				
✓ SPEAKER	✓ HEADSET	✓ MUTE	✓ VOLUME UP	✓ CONTACTS
✓ MESSAGE	✗ HOLD	✗ TRANSFER	✓ VOLUME DOWN	✓ CALL LOG
✗ DROP	✗ REDIAL	✗ CONFERENCE	✓ MENU	✓ FORWARD

Functions for fixed functions keys not present are accessible through display menu soft key functions.

Variant		SAP Code
9640 Telephone	Charcoal Grey	700383920
9640G Telephone	Charcoal Grey	700419195
9640 without faceplate	–	700408610
9640G without faceplate	–	700429095
SMB24 Button Module	Charcoal Grey	700462518
SMB24 without faceplate	–	700462526
SMB24 Replacement Stand	Silver	700416571
Replacement Stand	Silver	700416563
Wedge Stand	Charcoal Grey	700383888
Wall Mounting Plate	Charcoal Grey	700383383
Gigabit Adapter	–	700383771

Bluetooth Adapter	–	700383789
Replacement Handset		700416548
Amplified Speech Handset		700446370
Replacement Handset Cord (9 feet)		700383318
Replacement Handset Cord (25 feet)		700383821
Replacement Line Cord		700383326

10.11.51 9641G

- This phone is supported by the IP Office Release 8.0 Q1 2012 Service Pack and higher. The voice activated dialing and USB features are not supported.
- The previous restrictions against using the IP Office system as the HTTP file server for this type of phone have been removed.

The phones support 24 programmable buttons which are displayed as touchscreen options. These can be used for call appearance functions and other IP Office features. In addition the phone supports a home screen on which the user can add up to 8 icons for programmable functions in addition to those icons present through installation configuration.

This phone can be used with up to 3 x BM12 button module. Each module provides an additional 24 programmable buttons. Attaching button modules may change the phones PoE class and may require a separate power supply.

If not being powered by PoE, these telephones do not support the former 1151 and 1152 series of Avaya single phone power supply units. Instead an Avaya Single Port PoE injector (SPPOE-1A) should be used.

Variant		SAP Code
9641G Telephone	Charcoal Grey	700480627
Single Port PoE Injector (SPPOE-1A)	–	700500725
BM12 Button Module	Charcoal Grey	700480643

10.11.52 9650, 9650C

These phones are supported on IP500 and IP500 V2 systems running IP Office Release 6.0 and higher. The phones are supplied with a two-position stand.

- The availability of VCM (Voice Compression Module) 50 channels is necessary to support IP telephony. For IP Office 6.0+, these phones require an **Avaya IP Endpoints** 409 license.
- The voice activated dialing and USB features are not supported.
- For IP Office Release 6.1, these phones are supported running SIP software. When that is the case, the IP Office or IP Office Manager should not be used as the file server for the phone. Avaya SIP phones require an Avaya IP Endpoints license.
- The Class requirement of PoE powered phones may be increased if the phone is used with additional equipment such as a button module.

9650	Feature	9650	9650C
	Connects via	IP network.	IP network.
	IP Office Release	6.0+	6.0+
	Programmable Buttons	✓	✓
	Headset Socket	✓	✓
	Handsfree Speaker/ Microphone	✓/✓	✓/✓
	Message Waiting Lamp	✓	✓
	PoE Class/Typical Idle Power Consumption	Class 2	Class 2
	Display	1/3 VGA Greyscale	1/3 VGA Color
	Supported Add-Ons	SMB24 362 x 3.	SMB24 362 x 3.
	Upgradeable Firmware	✓	✓
	PC Pass-Through Port/ with Voice Priority	✓/✓	

Fixed Function Keys				
✓ SPEAKER	✓ HEADSET	✓ MUTE	✓ VOLUME UP	✓ CONTACTS
✓ MESSAGE	✗ HOLD	✗ TRANSFER	✓ VOLUME DOWN	✓ CALL LOG
✗ DROP	✗ REDIAL	✗ CONFERENCE	✓ MENU	✗ FORWARD

Functions for fixed functions keys not present are accessible through display menu soft key functions.

Variant		SAP Code
9650 Telephone	Charcoal Grey	700383938
9650C Telepehone	Charcoal Grey	700461213
9650 without faceplate	–	700408628
9650C without faceplate	–	700462526
SMB24 Button Module	Charcoal Grey	700462518
SMB24 without faceplate	–	700462526
SMB24 Replacement Stand	Silver	700416571
Replacement Stand	Silver	700416563
Wedge Stand	Charcoal Grey	700383888
Wall Mounting Plate	Charcoal Grey	700383383
Gigabit Adapter	–	700383771
Bluetooth Adapter	–	700383789
Replacement Handset		700416548
Amplified Speech Handset		700446370
Replacement Handset Cord (9 feet)		700383318

Replacement Handset Cord (25 feet)		700383821
Replacement Line Cord		700383326

10.11.53 Audio Conferencing Unit

Avaya M and T-Series phones are supported by IP Office Release 7.0 and higher on an IP500 V2. They can be connected to digital station ports provided by an IP500 TCM8 base card or on a DS16A/DS30A external expansion module.

The Audio Conferencing Unit (ACU) is a multiple microphone desktop conferencing unit. The Audio Conferencing unit only supports the following Feature codes:

- **Speeddial: *Feature 0***
  This feature code can be used to dial a stored number.
  - If ***Feature 0*** is followed by a 3-dight number in the range 000 to 255, the system directory entry with the matching index is dialed.
  - If ***Feature 0*** is followed by ***** and a 2-digit number in the range 71 to 94, the personal directory entry with the matching index is dialed.
- **Hold/Switch Calls: *Feature 2***
  This feature code will hold the current call. If there was already a call on hold, the feature code will switch between calls.
- **Conference: *Feature 3***
  If the Audio Conferencing Unit has a call connected and another call on hold, using this feature code will conference the unit and those calls.
- **Last Number Redial: *Feature 5***
  When the phone is idle, this feature code can be used to redial the last number dialed from the Audio Conferencing Unit.

10.11.54 ETR 6, ETR 6D

This phone is supported with IP Office Release 6.0 and higher. It is only supported on an ETR6 card in IP500 V2 systems. They are only supported in IP Office Basic Edition - PARTNER® Mode or IP Office Basic Edition - Quick Mode modes running in a North American locale. They are not supported on systems which have their companding mode set to A-Law.

Both 'Refresh' and 'Euro Style' variants of the phones are supported. An additional analog device using the same extension number can be connected via the ETR phone's AUX socket.

10.11.55 D100 Series

The D160 is a DECT mobile telephone handset. It connects to a DECT base station that supports up to 8 D100 handsets. The base station itself connects to the IP Office using a SIP trunk configured on the IP Office.

The base station support up to 8 D160 handsets. Currently only 1 base station is supported. Each D100 handset appears in the IP Office configuration as a SIP extension and requires an ***Avaya IP Endpoint*** license and available VCM resources.

10.11.56 ETR 18, ETR 18D

This phone is supported with IP Office Release 6.0 and higher. It is only supported on an ETR6 card in IP500 V2 systems. They are only supported in IP Office Basic Edition - PARTNER® Mode or IP Office Basic Edition - Quick Mode modes running in a North American locale. They are not supported on systems which have their companding mode set to A-Law.

Both 'Refresh' and 'Euro Style' variants of the phones are supported. An additional analog device using the same extension number can be connected via the ETR phone's AUX socket.

10.11.57 ETR 34D

This phone is supported with IP Office Release 6.0 and higher. It is only supported on an ETR6 card in IP500 V2 systems. They are only supported in IP Office Basic Edition - PARTNER® Mode or IP Office Basic Edition - Quick Mode modes running in a North American locale. They are not supported on systems which have their companding mode set to A-Law.

Both 'Refresh' and 'Euro Style' variants of the phones are supported. An additional analog device using the same extension number can be connected via the ETR phone's AUX socket.

A maximum of 4 ETR 34D phones are supported on a system with a maximum of 2 on any individual ETR6 base card.

10.11.58 M7100

Avaya M and T-Series phones are supported by IP Office Release 7.0 and higher on an IP500 V2. They can be connected to digital station ports provided by an IP500 TCM8 base card or on a DS16A/DS30A external expansion module.

10.11.59 M7100N

Avaya M and T-Series phones are supported by IP Office Release 7.0 and higher on an IP500 V2. They can be connected to digital station ports provided by an IP500 TCM8 base card or on a DS16A/DS30A external expansion module.

10.11.60 M7208

Avaya M and T-Series phones are supported by IP Office Release 7.0 and higher on an IP500 V2. They can be connected to digital station ports provided by an IP500 TCM8 base card or on a DS16A/DS30A external expansion module.

10.11.61 M7208N

Avaya M and T-Series phones are supported by IP Office Release 7.0 and higher on an IP500 V2. They can be connected to digital station ports provided by an IP500 TCM8 base card or on a DS16A/DS30A external expansion module.

10.11.62 M7310

Avaya M and T-Series phones are supported by IP Office Release 7.0 and higher on an IP500 V2. They can be connected to digital station ports provided by an IP500 TCM8 base card or on a DS16A/DS30A external expansion module.

10.11.63 M7310N

Avaya M and T-Series phones are supported by IP Office Release 7.0 and higher on an IP500 V2. They can be connected to digital station ports provided by an IP500 TCM8 base card or on a DS16A/DS30A external expansion module.

10.11.64 M7324

Avaya M and T-Series phones are supported by IP Office Release 7.0 and higher on an IP500 V2. They can be connected to digital station ports provided by an IP500 TCM8 base card or on a DS16A/DS30A external expansion module.

- Additional buttons can be supported on a M7324 phone through the addition of KLM button module 36.

10.11.65 M7324N

Avaya M and T-Series phones are supported by IP Office Release 7.0 and higher on an IP500 V2. They can be connected to digital station ports provided by an IP500 TCM8 base card or on a DS16A/DS30A external expansion module.

10.11.66 T7000

Avaya M and T-Series phones are supported by IP Office Release 7.0 and higher on an IP500 V2. They can be connected to digital station ports provided by an IP500 TCM8 base card or on a DS16A/DS30A external expansion module.

The T7000 telephone is an entry-level digital set for basic low-use office environments. The T7000 is used primarily in the EMEA (not available in North America).

10.11.67 T7100

Avaya M and T-Series phones are supported by IP Office Release 7.0 and higher on an IP500 V2. They can be connected to digital station ports provided by an IP500 TCM8 base card or on a DS16A/DS30A external expansion module.

10.11.68 T7208

Avaya M and T-Series phones are supported by IP Office Release 7.0 and higher on an IP500 V2. They can be connected to digital station ports provided by an IP500 TCM8 base card or on a DS16A/DS30A external expansion module.

10.11.69 T7316

Avaya M and T-Series phones are supported by IP Office Release 7.0 and higher on an IP500 V2. They can be connected to digital station ports provided by an IP500 TCM8 base card or on a DS16A/DS30A external expansion module.

10.11.70 T7316E

Avaya M and T-Series phones are supported by IP Office Release 7.0 and higher on an IP500 V2. They can be connected to digital station ports provided by an IP500 TCM8 base card or on a DS16A/DS30A external expansion module.

- Additional buttons can be supported on a T7316E phone through the addition of T7316E KEM 364 button modules.

10.11.71 T7406, T7406e

Avaya M and T-Series phones are supported by IP Office Release 7.0 and higher on an IP500 V2. They can be connected to digital station ports provided by an IP500 TCM8 base card or on a DS16A/DS30A external expansion module.

These cordless phones use a base station that can support multiple sets. The T7406E base station supports up to 4 T7406E handsets. The T7406 base station supports up to 3 T7406 handsets. Each supported handset requires a connection from the base station to a TCM port on the IP Office system.

Each phone is dedicated to its base station and cannot roam even if multiple base stations are installed.

The T7406E is available in North America, Mexico and Caribbean countries excluding Jamaica and Trinidad. The T7406E replaces the discontinued T7406 cordless telephone.

10.11.72 T3 Classic

This phone is supported in Europe only (A-Law only). The T3 Classic has 2 Link ports for optional add-on T3 Headset and or T3 DSS units (up to 2 further T3 DSS units can be chained from the first T3 DSS).

The IP Office supports T3 UPN and IP phones. It does not support T3 IPN phones. Previous restrictions against using T3 phones on systems with other types of digital stations no longer apply.

T3 Classic	Feature	Detail
	Connects via	DS port.
	IP Office Release	3.1+. [Not Small Office Edition]
	Programmable Buttons	✓ 4.
	Headset Socket*	✓
	Handsfree Speaker/Microphone	✓/✓
	Message Waiting Lamp	✓
	Upgradeable Firmware	✗

*Using optional T3 Headset Link unit.

Variant	Colour	SAP Code
T3 UPN Classic	Black	700380272
	White	700380306
T3 IP Classic	Black	700414733
	White	700414725
T3 DSS Unit	Black	700380322
	White	700380330
T3 DSS Expansion Unit	Black	700380348
	White	700380355
T3 IP Power Supply Unit		700414766
AEI/Headset Link for T3 IP		700414774
Power Supply for T3 IP DSS		700414790
Headset Link for T3 UPN		700380363

10.11.73 T3 Comfort

This phone is supported in Europe only (A-Law only). The T3 Classic has 2 Link ports for optional add-on T3 Headset and or T3 DSS units (up to 2 further T3 DSS units can be chained from the first T3 DSS).

The IP Office supports T3 UPN and IP phones. It does not support T3 IPN phones. Previous restrictions against using T3 phones on systems with other types of digital stations no longer apply.

T3 Comfort	Feature	T3 Comfort
	Connects via	DS ports.
	IP Office Release	3.1+ [Not Small Office Edition]
	Programmable Buttons	✓ 10.
	Headset Socket*	✓
	Handsfree Speaker/Microphone	✓/✓
	Message Waiting Lamp	✓
	Upgradeable Firmware	✗

*Using optional T3 Headset Link unit.

Variant	Colour	SAP Code
T3 UPN Comfort	Black	700380280
	White	700380314
T3 IP Comfort	Black	700414758
	White	700414741
T3 DSS Unit	Black	700380322
	White	700380330
T3 DSS Expansion Unit	Black	700380348
	White	700380355
T3 IP Power Supply Unit		700414766
AEI/Headset Link for T3 IP		700414774
Power Supply for T3 IP DSS		700414790
Headset Link for T3 UPN		700380363

10.11.74 T3 Compact

This phone is supported in Europe only (A-Law only). The T3 Classic has 1 Link port for optional add-on T3 Headset or T3 DSS units (up to 2 further T3 DSS units can be chained from the first T3 DSS).

The IP Office supports T3 UPN and IP phones. It does not support T3 IPN phones. Previous restrictions against using T3 phones on systems with other types of digital stations no longer apply.

T3 Compact	Feature	T3 Compact
	Connects via	DS ports.
	IP Office Release	3.1+ [Not Small Office Edition]
	Programmable Buttons	✓ 10.
	Headset Socket	✓
	Handsfree Speaker/Microphone	✓/✓
	Message Waiting Lamp	✓
	Upgradeable Firmware	✗

*Using optional T3 Headset Link unit.

Variant	Colour	SAP Code
T3 UPN Compact	Black	700380264
	White	700380298
T3 IP Compact	Black	700414717
	White	700414709
T3 DSS Unit	Black	700380322
	White	700380330
T3 DSS Expansion Unit	Black	700380348
	White	700380355
T3 IP Power Supply Unit		700414766
AEI/Headset Link for T3 IP		700414774
Power Supply for T3 IP DSS		700414790
Headset Link for T3 UPN		700380363

10.12 Phone Add-Ons

For IP Office Release 5.0 and higher, the maximum combined number of buttons on buttons modules per system is 1024. T3 DSS modules are not included in the combined limits stated above but are limited to 30 T3 DSS modules (1080 buttons).

- **1100 KEM:** *+18 (Max 3 per phone, 56 per system.)*
  Add-on for 1120E and 1140E phones. Each module provides 18 additional programmable buttons.
- **1200 KEM:** *+12 (Max 7 per phone, 85 per system.)*
  Add-on for 1220 and 1230 phones. Each module provides 12 additional programmable buttons.
- **4450** 356**:** *+60 (Max 2 per phone, 2 per external expansion module or control unit, 8 per system.)*
  Add-on for 4412D+ and 4424D+ phones. Provides an additional 60 programmable buttons with a single lamp - red except for the bottom two rows which are green. Due to the single lamp not recommended for appearance functions as not all button states can be indicated.
- **BM12:** *+24 (Max 3 per phone, 32 per system.)*
  Add-on for 9508 324, 9608 325, 9611 326 and 9641 334 phones. Provides 12 buttons assignable in 2 pages for 24 features. When used with a 9508, power must be supplied to the phone using an inline power module such as the 1151C or equivalent.
- **BM32** 357**:** *+32 (Max 3 per phone, 32 per system.)*
  Add-on for the 1616 phones that provides two columns of 16 buttons. Up to 3 BM32 modules are supported with any 1616. For IP Office 5.0, up to a maximum of 32 BM32 modules total are supported the IP Office system.
- **DBM32** 358**:** *+32 (Max 3 per phone, 32 per system.)*
  Add-on for the 1416 phones that provides two columns of 16 buttons. Up to 3 BM32 modules are supported with any 4616. For IP Office 5.0, up to a maximum of 32 BM32 modules total are supported the IP Office system.
- **EU24** 359**:** *+24 (Max 1 per phone, 8 per system.)*
  Add-on for the 2420, 4620, 4620SW, 4625, 5420, 5620, 5620SW and 5621. Provides an additional 24 programmable buttons. Button display icons are on two switchable pages with 12 icons on each page.
- **EU24BL** 360**:** *+24 (Max 1 per phone, 8 per system.)*
  As per the EU24 above but with a backlight function to match the 4621. Not supported on the 2420 and 5420.
- **KLM** 361**:** *+48 (Max 2 per phone, 21 per system.)*
  Used with M7324 345 phones. Up to 2 buttons modules are supported per phone. Each button module provides 48 programmable buttons.
- **SMB24** 362**:** *+24 (Max 3 per phone, 42 per system.)*
  Supported with 9630G, 9640, 9640G, 9650 and 9650C telephones.
- **T3 DSS** 363**:** *+36 (Max 3 per phone, 30 per system.)*
  Up to 3 of these units can be connected to any of the IP Office T3 phones. Each provides an additional 36 programmable buttons. Each button includes a single red status LED. Maximum 3 per phone, 30 per system. Connection of the T3 DSS varies:
  - With non-IP models, the first T3 DSS connects directly to a link port on the phone. No additional power supplies are required.
  - With T3 IP Models, the first T3 DSS connects to a DSS Link Unit fitted to the phone. A power supply is required for the DSS.
- **T7316E KEM** 364**:** *+24 (Max 9 per phone, 42 per system.)*
  Used with T7316E 349 phones. Each button module provides 24 programmable buttons. Up to 4 buttons modules are supported per phone without additional power supply. Up to 4 buttons modules are supported per phone without additional power supply. From 5 to 9 modules can be supported with additional power. Maximum 9 per phone (4 without additional power).
- **XM24** 365**:** *+24 (Max 1 per phone, 2 per expansion module or control unit, 21 per system.)*
  Add-on for 6416D and 6424D phones. Provides an additional 24 programmable buttons. Connects direct to phone.

10.12.1 201B RIM

The 201B Recorder Interface Module (RIM) is supported for use with 2420 and 5420 phones. It provides the phone with a 3.5mm mini-RCA jack socket for connection of recording devices. It also provides two headset sockets which can be used in place of the phones existing headset socket (the phone and the RIM sockets can not be used at the same time).

- The 201B is the RoHS compliant replacement for the 201A. The 20B stand is the RoHS complaint replacement for the 20A stand.

To install the 201B, the phones existing stand must be removed and be replace by a 20B stand (also called the 20B Module Adapter Base). This is an expanded stand that includes two slots, into one of which the 201B can be inserted. However only one 201B is supported per phone.

Use of the 20B and therefore the 201B requires the phone to be powered by a 1151D1 or 1151D2 power supply unit. Full installation instructions are included with the 20B Stand.

Item		SAP Code
201B Recorder Interface Module		700381635
20B Stand		700381650
EU24	Multi-Grey	700381817
1151D1 Power Supply	With CAT5 cable.	700434897
1151D2 Power Supply with battery backup.	With CAT5 cable.	700434905
1151D1/1151D2 Power Cord	USA	405362641
	Europe	407786623
	Australia/New Zealand	407786631
	India	407790991
	United Kingdom	407786599
	Argentina	408161453

10.12.2 4450

The maximum number of button module buttons supported, of any type, on a single system is 1024 354.

The DSS4450 works in association with the 4412D and 4424D telephones, each of which can support up to two DSS4450 adjuncts.

Each DSS4450 provides an additional 60 programmable keys with single red lamps except for the bottom two rows which have green lamps. The DSS4450 requires an auxiliary Avaya power supply unit and must be used with the cables supplied.

IP Office supports a maximum 2 x 4450 units on each Digital Station expansion module, including the IP406 V2 control unit. A maximum of 8 x 4450 units total are supported on the whole IP Office system. For additional limitations see Phone Add-Ons 354.

This phone is not supported on the IP500 DS8 Extension Card. For the IP500 it will work on external Digital Station Expansion Modules.

4450	Feature	Detail
	Connects via	DSS port on phone.
	Supported by	4412D+, 4424D+
	Maximum per phone	2.
	Maximum per DS module/ control unit	2.
	Maximum per IP Office system	8.
	Additional requirements	4450 power supply unit on phone.
	IP Office Release	1.0+
	Programmable Buttons	✓ 60 (50x/10x).

Item	SAP Code
4450 (Black)	108199696
4450 (White)	108199407
Small 4400 Series Stand (Black)	108541194
Small 4400 Series Stand (White)	108541202
Power Supply for 4450	108596412

10.12.3 BM32

The maximum number of button module buttons supported, of any type, on a single system is 1024 354.

The BM32 add on provides an additional 32 twin-LED programmable buttons for 1616 phones. The units do not require their own power supply connection as they draw power from the phone to which they are connected.

- Up to 3 units can be connected in a chain from a single 1616.
- For 1616 phones, to support a BM32 the phone must be powered by an individual 1600 Series Power Adapter.
- Up to a maximum of 32 BM32 units on the system. For additional limitations see Phone Add-Ons 354.

Item	SAP Code
BM32 BUTTON MODULE	700415573
Accessories	
1600 SERIES BM32 CABLE - REPLACEMENT	700415581
1600 SERIES BM32 BOND BRIDGE - REPLACEMENT	700415599
1616/BM32 PLASTIC LABEL COVERS (20) – REPLACEMENT	700415672
1600 SERIES BM32 FLIP STAND - REPLACEMENT	700432800
Paper Labels	
1616/BM32 PAPER DESI LABELS - PACKAGE OF 50 LABELS (8.5" x 11")	700415656
1616/BM32 PAPER DESI LABELS - PACKAGE OF 50 LABELS (A4)	700434236

10.12.4 DBM32

The maximum number of button module buttons supported, of any type, on a single system is 1024 354.

The DBM32 add on provides an additional 32 twin-LED programmable buttons for 1416 phones. The units do not require their own power supply connection as they draw power from the phone to which they are connected.

- Up to 3 units can be connected in a chain from a single 1416.
- Up to a maximum of 32 DBM32 units on the system.

Item	SAP Code
DBM32 BUTTON MODULE	700469968
Accessories	
1600 SERIES BM32 CABLE - REPLACEMENT	700415581
1600 SERIES BM32 BOND BRIDGE - REPLACEMENT	700415599
1616/BM32 PLASTIC LABEL COVERS (20) – REPLACEMENT	700415672
1600 SERIES BM32 FLIP STAND - REPLACEMENT	700432800
Paper Labels	
1616/BM32 PAPER DESI LABELS - PACKAGE OF 50 LABELS (8.5" x 11")	700415656
1616/BM32 PAPER DESI LABELS - PACKAGE OF 50 LABELS (A4)	700434236

- **Note for Australian installations only:**
  Installations of the 1416 terminal with an 1151 PSU and DBM32 must be restricted to the same building as the host Gateway. That is, the 1416 – if installed with an 1151 PSU and DBM32 – cannot be connected in a campus environment where the 1416 terminal is installed in a building separate from the building housing the Gateway. This application cannot be used with exposed (out-of-building) wiring.
  - For installations in which the 1416 is used without the 1151 PSU and DBM32, campus connections are acceptable: the 1416 can be located in a separate building in these cases.
  - This restriction applies to Australian installations only.

10.12.5 EU24

The maximum number of button module buttons supported, of any type, on a single system is 1024 354.

Provides an additional 24 programmable buttons. For additional limitations see Phone Add-Ons 354.

- ⚠ Only the cable supplied with the EU24/EU24BL should for connection to the EU24/EU24BL. This cable should only be connected to the port marked EU24 on suitable phones. Doing otherwise will cause damage to the EU24/EU24BL and the equipment to which it is attached.

EU24	Feature	Detail
	Connects via	EU24 port on phone.
	Supported by	2420, 4620, 4621, 4625, 5420, 5620, 5621.
	Maximum per phone	1.
	Maximum per IP Office	8.
	Additional Requirements	A 1151 Type power supply unit must be used to power the phone.
	IP Office Release	3.0+
	Programmable Buttons	✔ 24.

Item		SAP Code
EU24 1XU-A Expansion Module	Multi-Grey	700381817
1151D1 Power Supply	With CAT5 cable.	700434897
1151D2 Power Supply with battery backup.	With CAT5 cable.	700434905
1151D1/1151D2 Power Cord	USA	405362641
	Europe	407786623
	Australia/New Zealand	407786631
	India	407790991
	United Kingdom	407786599
	Argentina	408161453

10.12.6 EU24BL

The maximum number of button module buttons supported, of any type, on a single system is 1024 354.

Provides an additional 24 programmable buttons. The EU24BL is physically similar to the EU24 but includes a backlight function that matches 4621 phone. For additional limitations see Phone Add-Ons 354.

- ⚠ Only the cable supplied with the EU24/EU24BL should for connection to the EU24/EU24BL. This cable should only be connected to the port marked EU24 on suitable phones. Doing otherwise will cause damage to the EU24/EU24BL and the equipment to which it is attached.

EU24BL	Feature	Detail
	Connects via	EU24 port on phone.
	Supported by	4620, 4621, 4625, 5620, 5621.
	Maximum per phone	1.
	Maximum per IP Office	8.
	Additional requirements	A 1151 Type power supply unit must be used to power the phone.
	IP Office release	3.1+.
	Programmable Buttons	✓ 24.

Item		SAP Code
EU24BL 2XU-A Backlighted Expansion Module	Multi-Grey	700381544
1151D1 Power Supply	With CAT5 cable.	700434897
1151D2 Power Supply with battery backup.	With CAT5 cable.	700434905
1151D1/1151D2 Power Cord	USA	405362641
	Europe	407786623
	Australia/New Zealand	407786631
	India	407790991
	United Kingdom	407786599
	Argentina	408161453

10.12.7 KLM Module

The maximum number of button module buttons supported, of any type, on a single system is 1024 354.

This type of button module can be used with the M7324 345 phones to provide additional programmable buttons. For IP Office Essential Edition, up to 2 modules can be attached to each phone. For IP Office Basic Edition - PARTNER® Mode,IP Office Basic Edition - Norstar Mode and IP Office Basic Edition - Quick Mode only 1 module can be attached to each phone. Each module requires its own power supply unit.

+01	+13	+25	+37
+02	+14	+26	+38
+03	+15	+27	+39
+04	+16	+28	+40
+05	+17	+29	+41
+06	+18	+30	+42
+07	+19	+31	+43
+08	+20	+32	+44
+09	+21	+33	+45
+10	+22	+34	+46
+11	+23	+35	+47
+12	+24	+36	+48

10.12.8 SMB24

The maximum number of button module buttons supported, of any type, on a single system is 1024 354.

This button module is supported with 9630G, 9640, 9640g, 9650 and 9650C telephones. Up to 3 SMB24 modules can be attached to any one phone. For additional limitations see Phone Add-Ons 354.

- The Class requirement of PoE powered phones may be increased if the phone is used with additional equipment such as a button module.

Variant		SAP Code
SMB24 Button Module	Charcoal Grey	700462518
SMB24 without faceplate	–	700462526
SMB24 Replacement Stand	Silver	700416571

10.12.9 T3 DSS

The maximum number of button module buttons supported, of any type, on a single system is 1024 354.

The T3 DSS provides an additional 36 programmable keys for phones in the supported T3 series. The T3 DSS is moulded and designed to be attached to the associated phone. Signalling is achieved by cable connection to the Link port on the T3 phone. A further two T3 DSS units can be chained from the first T3 DSS. For additional limitations see Phone Add-Ons 354
.

Feature	Detail
Connects via	Link port on phone.
Supported by	T3 Compact, T3 Classic, T3 Comfort
Maximum per phone	3.
Maximum per DS module	-.
Additional requirements	None.
IP Office release	3.1+.
Programmable Buttons	✓ 36.

Item	Colour	SAP Code
T3 DSS Unit	Black	700380322
	White	700380330
T3 DSS Expansion Unit	Black	700380348
	White	700380355

10.12.10 T7316e KEM

The maximum number of button module buttons supported, of any type, on a single system is 1024 354.

This type of button module can be used with the T7316E 349 phones to provide 24 additional programmable buttons. For IP Office Essential Edition, up to 9 modules can be added per phone, though addition power requirements apply if more than 4 modules are used with a phone. For IP Office Basic Edition - PARTNER® Mode, IP Office Basic Edition - Norstar Mode and IP Office Basic Edition - Quick Mode, only 4 modules can be added per phone.

+01	+13
+02	+14
+03	+15
+04	+16
+05	+17
+06	+18
+07	+19
+08	+20
+09	+21
+10	+22
+11	+23
+12	+24

10.12.11 XM24

The maximum number of button module buttons supported, of any type, on a single system is 1024 354.

Connects to the XM24 port on the base of 6416 and 6424 phones. Requires the phone to have a separate power supply using an Avaya 1151D1 or 1151D2 power supply unit and a power outlet socket are required. For additional limitations see Phone Add-Ons 354.

XM24	Feature	XM24
	Connects via	XM24 port on phone.
	Supported by	6416+, 6424+
	Maximum per phone	1.
	Maximum per DS module/control unit	2.
	Maximum per IP Office system	10
	Additional requirements	1151D1 or 1151D2 PSU for phone.
	IP Office Release	1.0+.
	Programmable Buttons	✓ 24.

Item		SAP Code
XM24	Grey	700406523
	White	700406515
XM24 Stand	Grey	108272378
	White	108272386
1151D1 Power Supply.	With CAT5 cable.	700434897
1151D2 Power Supply with battery backup.	With CAT5 cable.	700434905
1151D1/1151D2 Power Cord	USA	405362641
	Europe	407786623
	Australia and New Zealand	407786631
	India	407790991
	United Kingdom	407786599
	Argentina	408161453

10.13 Ancilliary Systems

10.13.1 Digitial Mobility Solution

Avaya 4100 Series and 7400 Series phones are supported using a Digital Mobility Solution (DMS). This is a DECT system that can be used to support up to 64 handsets. The DMS connects to the IP500 system using a TCM port for each handset.

Digital Mobility 2.4 GHz solution - North America and CALA		
7420 Handset		N7B80BK
7430 Handset		N7B80BLE6
7440 Handset		N7B80BQE6
Digital Mobility Base Station 10	2.4GHz, Compatible with Handset 7430/7440, Repeater 40.	N7B65KPE5
Digital Mobility Repeater 40	2.4GHz, Compatible with Handset 7430/7440, Base station 10.	N7B80AGE5
Digital Mobility External Antenna 51	International.	N7B65KWE5
DMC 080 Digital Mobility Controller	North America.	N7B65KJE5
DMC 320 Digital Mobility Controller	North America.	N7B65KKE5
Digital Mobility 1.9 GHz solution - North America		
7439 Handset	Replaces the 7430 model.	N7B80CLE6
7449 Handset	Replaces the 7430 model.	N7B80CNE6
Digital Mobility Base Station 19	North America.	N7B80CRE6
Digital Mobility Repeater 49	Canada, US.	N7B80CUE6
Digital Mobility External Antenna 51	International.	N7B65KWE5
DMC 080 Digital Mobility Controller	North America.	N7B65KJE5
DMC 320 Digital Mobility Controller	North America.	N7B65KKE5
Digital Mobility 1.8 GHz solution - Europe, Hong Kong, Australia, New Zealand		
4135 Handset	Europe & Hong Kong	N7B80BME6
4145 Handset	Europe & Hong Kong	N7B80BRE6
4145EX Handset KIT - EU	Ruggedized version of 4145 - Europe & Hong Kong	N7B80BWE6
4136 Handset	Australia/New Zealand	N7B80CCE6
4146 Handset	Australia/New Zealand	N7B80CEE6
4146EX Handset	Ruggedized version of 4146 - Australia/New Zealand	N7B80CFE6
Digital Mobility Base Station 15		N7B65KTE5
Digital Mobility Repeater 25		N7B65KUE5
Digital Mobility Repeater 45		N7B80AHE5
Digital Mobility External Antenna 51	International	N7B65KWE5
DMC 081 Digital Mobility Controller	International	N7B80AAE5
DMC 321 Digital Mobility Controller	International	N7B80ABE5
Digital Mobility 1.8 GHz solution - South America		
7434 (South America)		N7B80ACE6
7444 (South America)		N7B80ADE6
Digital Mobility Base Station 14		N7B80AEE6
Digital Mobility Repeater 24		N7B80AFE6
Digital Mobility External Antenna 51	International	N7B65KWE5
DMC 081 Digital Mobility Controller	International	N7B80AAE5
DMC 321 Digital Mobility Controller	International	N7B80ABE5

10.13.2 DECT R4

Avaya 3720, 3725, 3740 and 3749 phones connect to the DECT base stations in a DECT R4 system. They then connect to the IP Office via the IP network.

Avaya 3701 and 3711 phones are also supported but only as GAP compatible devices.

10.14 Applications

This section outlines the requirements for various IP Office applications. These are just outlines, for full details refer to the specific installation manuals for those applications and to the IP Office Technical Bulletins.

- **IP Office Application Server** 369
- **ContactStore for IP Office** 370
- **Customer Call Reporter** 371
- **IP Office Manager** 372
- **System Monitor** 373
- **one-X Portal for IP Office** 374
- **Flare Communicator for IP Office** 375
- **SoftConsole** 377
- **IP Office Video SoftPhone** 378
- **System Status Application (SSA)** 379
- **TAPI** 380
- **Voicemail Pro** 381

10.14.1 IP Office Application Server

The IP Office Application Server is a single server installation package for the IP Office applications listed below. The DVD installs the CentOS Linux operating system, the IP Office applications and a set of web pages for server management. Note that except in the case of an IP Office Application Server upgrade, the installation overwriites any existing oeprating system and data on the server PC.

- **one-X Portal for IP Office** 374
  User and configuration access is via web browser in the same way as for a Windows sever installation of one-X Portal for IP Office.
- **Voicemail Pro** 381
  Configuration access is done using a Windows installation of the Voicemail Pro client software. An installation package for the Voicemail Pro client is included on the IP Office Application Server server.

For Voicemail Pro server running on a Linux based platform, the following features are not supported:

- **VB Scripting**
- **3rd Party Database Integration**
- **VPNM**
- **UMS Web Voicemail**
  (However, access via IMAP and one-X Portal for IP Office are available as alternatives.)
- **ContactStore**
  Use of ContactStore is supported for IP Office Release 8.1 Feature Pack 1 and higher.

When logged into the voicemail server using the Voicemail Pro client, those features not supported are grayed out or hidden. If those features are present in an imported call flow, they will not function and calls attempting to use those features will be disconnected.

The Voicemail Pro client's backup and restore functions cannot currently be used to move voicemail data between a Linux based server and a Windows based server or vice versa. The client functions for importing and exporting module and the call flow database can be used.

For Small Community Network scenarios where multiple voicemail servers are present, for example distributed and backup server, a mix of Linux based and Windows based servers are allowed.

Details	
DVD	IP Office Application Server Release 8.1 DVD Set (2)
License	✓ - Depends on the IP Office applications selected during installation. The IP Office Application Server server itself does not require any license.

PC Requirements

The compatibility of any particular server PC cannot be guaranteed. A list of known suitable servers is available at https://hardware.redhat.com/.

PC Requirements	Minimum	Recommended
RAM	4GB	4GB
Hard Disk Free Space	30GB	30GB
Processor:		
- Pentium	Core 2 duo	Quad Core 2.4GHz
- AMD		Athlon 64 4000
Additional Apps:		
- Web Browser	• Internet Explorer 7+. • Firefox 3+ • Opera 2+ • Safari 3.2+	

Ports

Component	Ports
IP Office Application Server • HTTP/HTTPS Access • SFTP Access	 7070 22

- Access to additional ports is as per the IP Office applications selected during installation.

10.14.2 ContactStore

Voicemail Pro 381 can be used for manual and automatic call recording. Normally those recordings are placed into the mailbox specified for the user or hunt group whose call is being recorded and are then treated as normal messages. Contact Store allows those recordings to be redirected into a database on the ContactStore PC. This allows recordings to be archived and searched separately from user messages. User access to Contact Store is via web browser. This application requires entry of a license into the IP Office configuration.

- For IP Office Release 6.0 and higher, the supported version of ContactStore for IP Office is 7.8.
- For Linux based voicemail servers, ContactStore is only supported for IP Office Release 8.1 Feature Pack 1 and higher.

Details	
DVD	IP Office Release 8.1 User/Admin DVD Set (2) (700503230) (Disk 2)
License	✓ VMPro Recordings Administrators (IP400 ContactStore for IPO RFA - 187166). See Voicemail Pro Licenses 413.

PC Requirements

Minimum Server PC Requirements	
RAM	512MB
Hard Disk Free Space	10GB*
Processor:	
- Pentium	P4 2.4GHz
- Celeron	Not tested.
- AMD	Athlon XP 3000+, Athlon64
Additional Apps:	
- Web Browser	• Internet Explorer 7. • Internet Explorer 8.

Operating System Support	
Server OS:	
2003 Server	✓
2008 R2 Server	✓
2012 Server	✓
Client OS:	
XP Professional	✓
Vista	✓
Windows 7	✗
Windows 8	✗

- Vista support is only on Business, Enterprise and Ultimate versions.
- Windows 7 support is only on Professional, Enterprise and Ultimate versions.

- If run on the same PC as the Voicemail Pro, apart from meeting the requirements of Voicemail Pro:
  - ContactStore must use a separate disk partition from Voicemail Pro.
  - Minimum hard disk free space increases to 20GB* and Pentium processor to P4 2.8GHz minimum.
    - *1: For all voicemail servers, also allow 1MB per minute for messages and greeting storage.
    - *2: Also allow 7.2MB per hour for recordings in the Contact Store disk partition.
- Recordings and data are stored in PostgresSQL database. This is created during installation of the ContactStore software.

Ports

Component	Location - %ProgramFiles%\Avaya\IP Office\	Ports
Contact Store	Witness\tomcat5024\bin\tomcat5.exe	TCP 8888. UDP 50791. UDP 50795.

10.14.3 Customer Call Reporter

- **Customer Call Reporter** 371
  This application is installed on a server PC connected to the IP Office. Users access the application from their PC using a web browser. The application obtains data about the calls handled by CCR agents and groups from the IP Office system and stores that data in an MS-SQL database. It can support up to 150 agents and 75 supervisors.

Details	
DVD	IP Office Release 8.1 User/Admin DVD Set (2) (700503230) (Disk 2)
License	✓ See Customer Call Reporter Licenses 416.
Languages	Dutch, English (UK), English (US), French, Italian, Brazilian Portuguese, Russian and Spanish.

PC Requirements

Minimum Server PC Requirements	
RAM	2GB
Hard Disk Free Space	30GB
Processor:	
- Pentium	Intel Pentium D945 Dual Core
- Celeron	Not tested.
- AMD	AMD Athlon 64 4000+.
User PC Requirements	
Web Browser	• Google Chrome • Internet Explorer 7. • Internet Explorer 8. • Mozilla Firefox 3.0. • Safari 3.2.

Operating System Support	
Server OS:	
2003 Server	✓
2008 R2 Server	✓
2012 Server	✗
Client OS:	
XP Professional	✗
Vista	✗
Windows 7	✗
Windows 8	✗

- Vista support is only on Business, Enterprise and Ultimate versions.
- Windows 7 support is only on Professional, Enterprise and Ultimate versions.

10.14.4 Manager

This tool is used to access all parts of the IP Office configuration. Different levels of access can be defined to control which parts of the configuration the Manager user can view and alter. Manager is also used to upgrade the software files used by an IP Office system. When running is also acts as a TFTP server from which some Avaya phones can request new software.

Note that IP Office Manager's software level is always two higher than the IP Office core software with which it is release. For example IP Office 6.0 core software is release with IP Office Manager 8.0.

IP Office Manager is backwards compatible and can be used to manage IP Office systems running software from IP Office 2.1 upwards.

Details	
DVD	IP Office Release 8.1 User/Admin DVD Set (2) (700503230) (Disk 1)
Languages	English, Brazilian, Chinese (Simplified), Dutch, French, German, Italian, Russian, Spanish (Mexican).
License	✗ No license required.

PC Requirements

Minimum PC Requirements	
RAM	256MB
Hard Disk Free Space	1GB*
Processor:	
- Pentium	PIII 800MHz
- Celeron	Celeron 3 800Mhz
- AMD	Athlon Opteron, Athlon64/XP
Additional Apps:	
- .NET2	Installed with Manager if not already present.

Operating System Support	
Server OS:	
2003 Server	✓
2008 R2 Server	✓
2012 Server	✓
Client OS:	
XP Professional	✓
Vista	✓
Windows 7	✓
Windows 8	✓

- Vista support is only on Business, Enterprise and Ultimate versions.
- Windows 7 support is only on Professional, Enterprise and Ultimate versions.

*Includes disk space required for .NET2 component.

Ports

The IP Office Manager application uses the following ports for access to the telephone system. These ports may need to be allowed within the configuration of any firewall software being run on the PC hosting the IP Office Manager application. Note that the ports used by a particular system can be adjusted through its security settings.

Component	Location - %ProgramFiles%\Avaya\IP Office\Manager	Ports	
IP Office Manager	manager.exe	TCP Port 50802. TCP Port 50804. TCP Port 50805.	Configuration access
		TCP Port 50812. TCP Port 50813.	Security configuration access
Upgrade Wizard	upgradewiz.exe	UDP Port 50798.	System upgrade access.

10.14.5 Monitor

Monitor (also known as System Monitor) is a tool that can show all activity on the IP Office system in great detail. As a consequence, interpretation of Monitor traces requires a high-level of data and telephony protocol knowledge. However, all IP Office installers and maintainers must understand how to run Monitor when necessary as Avaya may request copies of Monitor traces to resolve support issues.

For IP Office 4.0 and higher, the System Status Application 379 has been added to provide more easily interpreted information than is provided by Monitor.

- Two versions of Monitor are included in the IP Office Admin applications suite, one for IP Office 4.0 systems and one for pre-4.0 IP Office systems. Care should be taken to ensure that the correct version is used when monitoring an IP Office system.

Details	
DVD	IP Office Release 8.1 User/Admin DVD Set (2) (700503230) (Disk 1)
Languages	English only.
License	✗ No license required.

PC Requirements

Minimum PC Requirements	
RAM	128MB
Hard Disk Free Space	10GB
Processor:	
- Pentium	PIII 800MHz
- Celeron	Celeron 3 800Mhz
- AMD	Athlon B 650MHz

Operating System Support	
Server OS:	
2003 Server	✓
2008 R2 Server	✓
2012 Server	✓
Client OS:	
XP Professional	✓
Vista	✓
Windows 7	✓
Windows 8	✓

- Vista support is only on Business, Enterprise and Ultimate versions.
- Windows 7 support is only on Professional, Enterprise and Ultimate versions.

Ports

Component	Location - %ProgramFiles%\Avaya\IP Office\	Ports
System Monitor	Monitor\sysmonitor.exe	UDP 50794.

10.14.6 one-X Portal for IP Office

This application is installed on a server PC connected to the IP Office. Users can access the one-X portal from their own PC using a web browser. The application allows the user to control their phones, access voicemail messages, call logs and phone directories.

Details	
DVD	IP Office Release 8.1 User/Admin DVD Set (2) (700503230) (Disk 2) or IP Office Application Server Release 8.1 DVD Set (2)
License	✓ See User Licenses 410.
Languages	Dutch, English (UK), English (US), French, Italian, Brazilian Portuguese, Polish, Russian, Turkish and Latin Spanish.

The details below are for a Windows based server installation of one-X Portal for IP Office. one-X Portal for IP Office can also be installed as part of a Linux based server installation using the IP Office Application Server DVD 369. Additional plugins supported for use with one-X Portal for IP Office have their own operating system requirements, refer to the one-X Portal for IP Office documentation for details.

PC Requirements

Minimum Server PC Requirements	
RAM	2GB
Hard Disk Free Space	10GB
Processor:	
- Pentium	Intel Pentium D945 Dual Core
- Celeron	Not tested.
- AMD	AMD Athlon 64 4000+.
User PC Requirements	
Web Browser	• Google Chrome. • Internet Explorer 7. • Internet Explorer 8. • Internet Explorer 9. • Mozilla Firefox 3.5+. • Safari 5.0+.

Operating System Support	
Server OS:	
2003 Server	✓
2008 R2 Server	✓
2012 Server	✓
Client OS:	
XP Professional	N/A
Vista	N/A
Windows 7	N/A
Windows 8	N/A

- Vista support is only on Business, Enterprise and Ultimate versions.
- Windows 7 support is only on Professional, Enterprise and Ultimate versions.

Ports

Component	Role	Ports
one-X Portal for IP Office	log4j Socket appender Tomcat shutdown listener Web sockets HTTP Browser access HTTPS Browser access JVMX component access HTTPS Browser access (Linux)	4560 8005 8069 8080 8443 8666 9443
OpenFire	Database access Database client listener OpenFire XML RPC OpenFire HTTPS	8082 9092 9094 9095
MyBuddy/XMPP	XMPP server XMPP server federation HTTPS access to MyBuddy	5222 5629 8086
Mobility	Mobility client access	8444

10.14.7 Flare Communicator for IP Office

Flare Communicator for IP Office is a user softphone application which allows the user to make and answer their calls from a range of telephone devices. Flare Communicator for IP Office client software is available Windows, iPad and Android devices.

Details	
License	✓ See the table below.
Languages	Dutch, English (UK), English (US), French, Italian, Brazilian Portuguese, Russian and Spanish.

Flare Communicator for IP Office is supported on IP Office Essential Edition , IP Office Preferred Edition and IP Office Advanced Edition systems. The features available to the user depend on how the user is licensed for Flare Communicator for IP Office and whether the system also includes one-X Portal for IP Office 374 and Voicemail Pro 381.

		Flare Communicator for IP Office Mode	
		Lite Mode	**Advanced Mode**
Basic Features		• Make calls, hold calls, mute and transfer calls. • System directory. • Local application call log.	• Make calls, hold calls, mute and transfer calls. • System directory. • Local application call log.
Advanced Features *(Require one-X Portal for IP Office and Voicemail Pro)*		–	• User directories and call logs via one-X Portal for IP Office • Presence (XMPP). • 2-Party Instant Messaging • 2-Party video calls. • Dual extension support.
User Profile		Any user profile.	• **Office Worker** or • **Power User**.
Licenses Required	**System License**	–	• **Essential Edition*** • **Preferred Edition**
	User Licenses	• **Avaya Softphone** license.	• **Office Worker** or • **Power User**.
System Mode	**IP Office Essential Edition**	✓ Yes	–
	IP Office Preferred Edition	✓ Yes	✓ Yes
	IP Office Advanced Edition	✓ Yes	✓ Yes

- **Client Software**
  The source for the Flare Communicator for IP Office client software depends on the user device. However, since Flare Communicator for IP Office is supported on a number of Avaya platforms, in all cases the installer must ensure that they obtains a Flare Communicator for IP Office client that specifically states IP Office support.

Windows PC Requirements

Minimum PC Requirements	
RAM	2GB
Hard Disk Free Space	1.5GB.
Processor	Dual-core 2.4GHz.
Display	1024 x 768
Other	USB Camera

Operating System Support	
Client OS:	
XP Home (32-bit	✓
XP Professional *(32-bit)*	✓
Vista *(32-bit)*	✗
Windows 7	✓
Windows 8	✓

- Vista support is only on Business, Enterprise and Ultimate versions.

- Windows 7 support is only on Professional, Enterprise and Ultimate versions.

User Platform Support	
Mobile Devices	
Windows Mobile	✓
iPad2 *(iOS 4.3.5+)*	✓
Android	✗

- **Server Software**
  There is no specific Flare Communicator for IP Office server. Support for basic mode features is provided directly by the IP Office system. Support for advanced mode features is provided by the one-X Portal for IP Office and Voicemail Pro applications.

10.14.8 SoftConsole

This is a licensed application. It is intended for telephone system operators or receptionists. Its displays details of calls directed to the user and allows them to quickly see the status of the callers required destination and transfer the call. The SoftConsole user is able to access a range of details about the status of users and groups on the IP Office system.

- The IP Office SoftConsole works in conjunction with a physical IP Office extension phone to provide the speech path for calls. It is not supported for use with an IP softphone.
- Up to 4 simultaneous SoftConsole users can be licensed.

Details	
DVD	IP Office Release 8.1 User/Admin DVD Set (2) (700503230) (Disk 1)
Languages	Brazilian, Chinese (Simplified), Danish, Dutch, English, French, Finnish, German, Italian, Korean, Latin Spanish, Norwegian, Portuguese, Russian, Spanish, Swedish.
License	✓ Licensed application. See below.

PC Requirements

Minimum PC Requirements	
RAM	128MB
Hard Disk Free Space	1GB
Processor:	
- Pentium	PIII 800MHz
- Celeron	Celeron 3 800Mhz
- AMD	Athlon B 650MHz

Operating System Support	
Server OS:	
2003 Server	✗
2008 R2 Server	✗
2012 Server	✗
Client OS:	
XP Professional	✓
Vista	✓
Windows 7	✓
Windows 8	✓

- Vista support is only on Business, Enterprise and Ultimate versions.
- Windows 7 support is only on Professional, Enterprise and Ultimate versions.

Ports

Component	Location - %ProgramFiles%\Avaya\IP Office\	Ports
SoftConsole	SoftConsole\SoftConsole.exe	UDP 50799. UDP 50796.

Licenses

License	Description	RFA Name	SAP
Receptionist	Adds one additional SoftConsole user. A maximum of four SoftConsole user can be licensed.	IPO LIC RECEPTIONIST RFA	171987

10.14.9 IP Office Video SoftPhone

The IP Office Video SoftPhone application is the preferred SIP softphone application for use with IP Office systems. It includes IP Office specific features not available in other non-Avaya SIP softphone applications.

For IP Office Release 8.0+, the IP Office Video SoftPhone is available as a Mac PC application in addition to the existing Windows PC application.

Details	
DVD	IP Office Release 8.1 User/Admin DVD Set (2) (700503230) (Disk 1)
Languages	Brazilian, Chinese (Simplified), English, French, German, Italian, Latin Spanish.
License	✓ User requires to be configured and licensed for either the ***Teleworker*** or ***Power User*** user profile.

Windows User PC Requirements

The following are the minimum and recommended requirements for IP Office Video SoftPhone.

Feature	Windows PC
Processor	• **Minimum:** Pentium 4 2.4 GHz or equivalent. Video Card with DirectX 9.0c support. For HD video, the minimum requirements are Intel Core 2 Duo 2.3 GHz or equivalent, hardware video acceleration, camera and 2GB RAM • **Optimal:** Intel Core 2 Duo or equivalent. Video Card with DirectX 9.0c support.
Memory	• **Minimum:** 1GB RAM. • **Optimal:** 2GB RAM.
Hard Disk Space	• 50MB.
Operating System	• **Microsoft Windows XP Service Pack 3**. • **Microsoft Windows Vista** *(32-bit and 64-bit)*. Vista support is only on Business, Enterprise and Ultimate versions. • **Microsoft Windows 7** *(32-bit and 64-bit)*. Windows 7 support is only on Professional, Enterprise and Ultimate versions. • **Mac OS 10.6 or above** *(Intel Core i5)*.
Sound Card	• Full-duplex, 16-bit or use USB headset.

Additional	• **Windows Installation**
	For installation on Windows PCs, access to the following Windows updates, appropriate to the user's version of Windows operating system, is required if not already installed.
	  • Microsoft .NET Framework 4.
	  • Microsoft Visual C++ 2008 SP1.
	  • Microsoft KB967634 Hotfix.

10.14.10 System Status Application (SSA)

This tool provides a wide range of information about the current status of an IP Office 4.0 or higher system. Its includes available resources and components within the system. This includes details of current call in progress. Details of the number of alarms are recorded and the time date of the most recent alarms.

When required for diagnostics escalation SSA is able to take a snap shot image of the IP Office system's status including a copy of its current configuration. Use of SSA requires an IP Office service user name and password that has been configured for System Status access in the IP Office's security settings.

- For IP500 V2 systems, SSA is pre-installed on the system's Avaya SD memory card and can be run by browsing to the IP Office system's IP address.

Details	
DVD	IP Office Release 8.1 User/Admin DVD Set (2) (700503230) (Disk 1)
License	✗ No license required.

PC Requirements

Minimum PC Requirements	
RAM	256MB
Hard Disk Free Space	1.4GB
Processor:	
- Pentium	PIII 800MHz
- Celeron	Celeron 3 800Mhz
- AMD	Athlon B 650MHz
Additional Apps:	
- Sun Java Virtual Machine	Installed with SSA if not already present.
- Web Browser	• Internet Explorer 7+. • Mozilla Firefox 3.0.

Operating System Support	
Server OS:	
2003 Server	✓
2008 R2 Server	✓
2012 Server	✓
Client OS:	
XP Professional	✓
Vista	✓
Windows 7	✓
Windows 8	✓

- Vista support is only on Business, Enterprise and Ultimate versions.
- Windows 7 support is only on Professional, Enterprise and Ultimate versions.

10.14.11 TAPI

IP Office TAPI is a client PC application that allows TAPI compliant applications to interact with the IP Office. The IP Office TAPI software can be used in one of two modes, depended on whether it is licensed or not. The same software is installed in either case with the licenses, if any, being entered in the IP Office system configuration.

- **1st Party TAPI**
  In this unlicensed mode the TAPI software supports control of an individual user's associated extension, allowing a TAPI compliant application to answer (requires a phone that supports handsfree answer) and make calls.
- **3rd Party TAPI**
  In this licensed mode, TAPI software can be used to control call function on multiple user extension. This mode is used with CTI Developer applications.

Details	
DVD	IP Office Release 8.1 User/Admin DVD Set (2) (700503230) (Disk 1)
License	✗ Optional. Licenses are required for 3rd party TAPI mode operation. See CTI Licenses 419.

PC Requirements: 1st Party TAPI

Minimum PC Requirements	
RAM	64MB
Hard Disk Free Space	50MB
Processor:	
- Pentium	PIII 800MHz
- Celeron	Celeron 3 800Mhz
- AMD	Athlon B 65-0MHz

Operating System Support	
Server OS:	
2003 Server	✗
2008 R2 Server	✗
2012 Server	✗
Client OS:	
XP Professional	✓
Vista	✓
Windows 7	✓
Windows 8	✓

- Vista support is only on Business, Enterprise and Ultimate versions.
- Windows 7 support is only on Professional, Enterprise and Ultimate versions.

PC Requirements: 3rd Party TAPI

Minimum PC Requirements	
RAM	64MB
Hard Disk Free Space	50MB
Processor:	
- Pentium	PIII 800MHz
- Celeron	Celeron 3 800Mhz
- AMD	Athlon B 65-0MHz

Operating System Support	
Server OS:	
2003 Server	✓
2008 R2 Server	✓
2012 Server	✓
Client OS:	
XP Professional	✓
Vista	✓
Windows 7	✓
Windows 8	✓

Ports

Component	Location - %ProgramFiles%\Avaya\IP Office\	Ports
TAPI2	TAPI\tspi2w.tsp	UDP 50797.

10.14.12 Voicemail Pro

This application requires various licenses entered into the IP Office configuration to control the features it offers and the number of simultaneous connections (IP500 = 40 (IP Office 5.0+) or 30 (pre-IP Office 5.0), IP500 V2 = 40). The operation of Voicemail Pro can be customized to provide special services. .

The Voicemail Pro software can be installed as separate Voicemail Pro client and server parts. This allows the remote administration of the Voicemail Pro server from a PC with just the Voicemail Pro client installed. A copy of the client is automatically installed locally with the Voicemail Pro server.

Source	
DVD	IP Office Release 8.1 User/Admin DVD Set (2) (700503230) (Disk 1) or IP Office Application Server Release 8.1 DVD Set (2)
Languages	Chinese (Mandarin and Cantonese), Danish, German, Greek, English (UK), English (US), Spanish, Latin Spanish, Finnish, French, French Canadian, Hungarian, Italian, Korean, Dutch, Norwegian, Polish, Portuguese, Brazilian, Swedish.
License	✓ See Voicemail Pro Licenses 413.

The details below are for a Windows based server installation of Voicemail Pro. Voicemail Pro can also be installed as part of a Linux based server installation using the IP Office Application Server DVD 369.

The Voicemail Pro server part of the software consists of several components in addition to the core server software, these are:

- **Campaigns**
  The Voicemail Pro can be configured to run a campaign. This consists of a series of questions for which the Voicemail Pro records the callers answer or key presses. The resulting recordings can then be played back by users. The web aspect of campaigns allows user to perform this playback and processing of campaign recordings via their web browser. This requires an IIS web server to be run on the same PC as the Voicemail Pro software.
- **Text to Speech (TTS)**
  Through adding additional licenses, the Voicemail Pro is able to use the TTS functions of Windows to speak text and numbers to callers in addition to recording prompts. This is intended mainly for scenarios where the Voicemail Pro is obtaining text and number values from a customer database.
- **Unified Messaging Service (UMS)**
  Voicemail Pro supports a feature called voicemail email to send messages or message alerts to a user's email mailbox. This however is a one-way process with no link back to the user's voicemail mailbox on whether the email has been read or deleted. UMS allows this to become a two-way process, where users can play voicemail messages through their email mailbox or voicemail mailbox.

Basic Voicemail Pro

Minimum PC Requirements	
RAM	256MB
Hard Disk Free Space	2GB*
Processor:	
- Pentium	P4 1.4GHz
- Celeron	Any 1.7GHz
- AMD	Any 1.4GHz.

*Also allow 1MB per minute for message and prompt storage.

Operating System Support		
Server OS:	**Service**	**Client**
2003 Server	✓	✓
2008 R2 Server	✓	✓
2012 Server	✓	✓
Client OS:		
XP Professional	✓	✓
Vista	✓	✓
Windows 7	✓	✓
Windows 8	✓	✓

- Vista support is only on Business, Enterprise and Ultimate versions.
- Windows 7 support is only on Professional, Enterprise and Ultimate versions.

Voicemail Pro plus UMS Web Voicemail and/or Campaigns

Minimum PC Requirements	
RAM	512MB
Hard Disk Free Space	2GB*
Processor:	
- Pentium	P4 2.8GHz
- Celeron	Not tested.
- AMD	Athlon XP 3000+, Athlon 64

*Also allow 1MB per minute for message and prompt storage.

Operating System Support		
Server OS:	**Service**	**Client**
2003 Server	✓	✓
2008 R2 Server	✓	✓
2012 Server	✓	✓
Client OS:		
XP Professional	✗	✗
Vista	✗	✗
Windows 7	✗	✗
Windows 8	✗	✗

- Both Web Campaigns and UMS Web Voicemail require the IIS web server on the voicemail server PC to be enabled.
- UMS Web Voicemail will install PHP if not detected as already installed.

Voicemail Pro plus IVR and or TTS

Minimum PC Requirements: Basic Voicemail Pro	
RAM	512MB
Hard Disk Free Space	20GB*
Processor:	
- Pentium	P4 2.8GHz
- Celeron	Not tested.
- AMD	Athlon XP 3000+, Athlon 64

Also allow 1MB per minute for message and prompt storage.

*Generic TTS only. The current ScanSoft TTS provided with Voicemail Pro is not supported on Vista.

Operating System Support		
Server OS:	**Service**	**Client**
2003 Server	✓	✓
2008 R2 Server	✓	✓
2012 Server	✓	✓
Client OS:		
XP Professional	✓	✓
Vista	✗	✗
Windows 7	✗	✗
Windows 8	✗	✗

- If the database being queried is located on the VM Pro server, the query speed of the database will be affected by the amount of memory available. Please take into account the memory requirements of the database being queried.

Ports

The Voicemail Pro service uses the following ports.

Port Number	Type	Description
25	TCP	Used to listen for SMTP connections.
37	UDP	Used to receive time requests (RFC 868).
143	TCP	Used to service IMAP4 requests.
50791	UDP	Used to receive requests from IP Office PBX.
	TCP	Used to receive requests fromone-X Portal for IP Office.
50791	TCP	Used to receive connections from Voicemail Pro client.

Note that additional ports may be used for connection to services such as 3rd party database or Microsoft Exchange.

10.14.13 Single Windows Server Support

The following scenarios are supported for combining IP Office server applications onto a single server PC.

In all cases, the individual requirements of each application as if installed on a separate server are still applicable. Also, depending on the application combination, additional restrictions and requirements may be applied as detailed below.

	Voicemail Pro	Customer Call Reporter	one-X Portal for IP Office	Minimum IP Office Release	Minimum PC Specification
1.	**16 Ports**	**150 Agents**	**–**	Release 5.0	As per each application.
2.	**8 Ports (4 TTS)**	**–**	**50 Simultaneous users.**	Release 6.0	2GHz Dual Core, 4GB RAM, Windows 2008 R2 Server (32 or 64-bit).
3.	**16 ports (8 TTS)**	**50 Agents**	**150 Simultaneous users.**	Release 6.0	2GHz Quad Core, 6GB RAM, Windows 2008 R2 64-bit. CCR run in Windows 2003 on a virtual server.

- Voicemail Pro includes UMS, VB Scripting and 3rd party database operation. It also includes the installation of ContactStore if required.
- Both ContactStore and one-X Portal for IP Office use Tomcat servers as part of the application. For scenarios with both installed, the redirect port setting of the ContactStore's Tomcat server should be configured to a port other than 8080.
- The supported virtual servers are:
  - **VMWare Server.**
  - **Microsoft Virtual Server 2005 R2.**
  - **Microsoft Server Hyper-V.**
- When used in a virtual server configuration, Customer Call Reporter and one-X Portal each require a 2GB RAM virtual machine. Voicemail Pro and ContactStore each require a 1GB RAM virtual machine.

10.14.14 IP Office Ports

Most PC firewalls will request the user to allow various exceptions when a newly installed application is first run. However this may not always be the case, especially if the firewall is located elsewhere than the user's PC.

Adding Firewall Exceptions

The file avayafw.bat can be used to open up the necessary firewall exceptions for IP Office applications. The file can be downloaded from http://marketingtools.avaya.com/knowledgebase/tools/firewall.

It only works for:

- The default Windows XP/Windows 2003 firewall.
- The application must be installed for the exception to be created.
- The application must be installed in the default location.

Whilst avayafw.bat only works subject to the conditions above, for other firewalls study of this file will indicate the necessary application files and ports for which exceptions need to be created.

Ports Used

The list below details many of the IP ports used by IP Office control units and IP Office applications. Many of these are standard ports for different IP traffic protocols.

- ◀ Indicates a listening port on the IP Office control unit.
- ▶ indicates a port to which the IP Office sends, for example to a PC running an IP Office application.
- * Indicates that the port and or protocol can be changed during or after installation.

Port		Protocol		Function
25*	▶	SMTP	TCP	Email system alarms from the IP Office to SMTP server. For IP Office 4.2 also used for Voicemail Email on Embedded Voicemail.
37	▶	Time	UDP	Time requests from the IP Office to a Time Server (RFC868).
53	◀	DNS	UDP	Domain Name Service responses.
67	◀	BOOTP/DHCP	UDP	DHCP server operation.
68	▶	BOOTP/DHCP	UDP	DHCP client operation.
69	◀	TFTP	UDP	File requests to the IP Office.
69	▶	TFTP	UDP	File requests by the IP Office.
80	◀	HTTP	TCP	HTTP File requests.
161*	◀	SNMP	UDP	From SNMP applications.
162*	▶	SNMP Trap	UDP	To addresses set in the IP Office configuration.
500	◀	IKE	UDP	Key exchange for IPSec protocol.
389*	▶	LDAP	TCP	Lightweight Directory Access Protocol.
443		HTTPS	TCP	HTTPS communication with IP Office provisioned DECT, IP Office Softphone.
520	▶	RIP	UDP	To and from the IP Office to other RIP devices. For RIP1 and RIP2 (RIP1 compatible) the destination address is a subnet broadcast, eg. 192.168.42.255. For RIP2 Multicast the destination address is 224.0.0.9.
520	◀	RIP	UDP	
1701	◀	L2TP	UDP	Layer 2 tunneling protocol.
1718	◀	H.323	UDP	H.323 Discovery
1719	◀	H.323 RAS	UDP	H.323 Status. VoIP device registering with the IP Office.
1720	▶	H.323/H.245	UDP	H.323 Signalling. Data to a registered VoIP device.
2127	▶	(UDP)	UDP	PC Wallboard to CCC Wallboard Server.
3478	▶	SIP	UDP	Port used for STUN requests from the IP Office to the SIP provider.
4560	▶	Log4j	TCP	one-X Portal for IP Office log4j socket appender
5005	◀	RTCPMon	UDP	RTCP Monitoring information from Avaya H323 phones.
5060	◀▶	SIP	UDP/ TCP*	SIP Line Signalling
5222	▶	XMPP	TCP	one-X Portal for IP Office XMPP client/server communication.
5369	▶	XMPP	TCP	one-X Portal for IP Office XMPP Server federation.
7070	◀	HTTP	TCP	IP Office links web page.
7070	▶	HTTPS	TCP	IP Office Web Control
8005	▶		UDP	one-X Portal for IP Office Tomcat server shutdown listener.
8069	▶		TCP	one-X Portal for IP Office Web sockets delivery
8080	▶	HTTP	TCP	Browser access to the Delta Server application.

Port		Protocol		Function
8080	▶	HTTP	TCP	Default one-X Portal for IP Office browser access.
8082	▶	HTTP	TCP	one-X Portal for IP Office database.
8086	▶	HTTPS	TCP	one-X Portal for IP Office MyBuddy
8089	▶	Enconf	UDP	From the IP Office to the Conferencing Center Server Service. User access to the Conferencing Center is direct via HTTP sessions.
8443	▶	HTTPS	TCP	Default one-X Portal for IP Office browser access (Windows server).
8444	▶		TCP	one-X Portal for IP Office Mobility client access.
8666	▶	JVMX	TCP	one-X Portal for IP Office JVMX component.
8888	▶	HTTP	TCP	Browser access to the IP Office ContactStore (VRL) application.
9092	▶	HTTP	TCP	one-X Portal for IP Office database listener.
9094	▶	HTTP	TCP	one-X Portal for IP Office OpenFire XML RPC.
9095	▶	HTTPS	TCP	one-X Portal for IP Office OpenFire admin
9443	▶	HTTPS	TCP	Default one-X Portal for IP Office browser access (Linux server).
49152 to 53247 *	◀▶	RTP/RTCP	UDP	Dynamically allocated ports used during VoIP calls for RTP and RTCP traffic. The port range can be adjusted through the System | Gatekeeper tab.
50791	▶	IPO Voicemail	UDP	To voicemail server address.
50793	◀	IPO Solo Voicemail	UDP	From IP Office TAPI PC with Wave drive user support.
50794	◀	IPO Monitor	UDP	From the IP Office Monitor application.
50795	◀	IPO Voice Networking	UDP	Small Community Network signalling (AVRIP) and BLF updates. Each system does a broadcast every 30 seconds. BLF updates are sent required up a maximum of every 0.5 seconds.
50796	◀	IPO PCPartner	UDP	From an IP Office application (for example SoftConsole). Used to initiate a session between the IP Office and the application.
50797	◀	IPO TAPI	UDP	From an IP Office TAPI user PC.
50798	▶	(UDP)	UDP	*BT Fusion variant. No longer used.*
50799	▶	IPO BLF	UDP	Broadcast to the IP Office LAN and the first 10 IP addresses registered from other subnets.
50800	▶	IPO License Dongle	UDP	To the License Server IP Address set in the IP Office configuration.
50801	◀	EConf	UDP	Conferencing Center Service to IP Office.
50802	◀	Discovery	TCP	IP Office discovery from Manager.
50804 *	◀	Service Access Protocol	TCP	IP Office configuration settings access.
50805 *	◀		TCP	" TLS Secure.
50808 *	◀		TCP	IP Office system status access.
50812 *	◀		TCP	IP Office security settings access.
50813 *	◀		TCP	" TLS Secure.

- CDR/SMDR from the IP Office is sent to the port number and IP address defined during configuration and using either TCP or UDP as selected.

Ports

IP Office Monitor can be used to display IP packet details including the source and destination Port numbers. As well as displaying the port numbers (in decimal), IP Office Monitor also displays the names of more commonly used ports including IP Office specific ports.

For example "src = 23" is interpreted as "src = 23 (Telnet)".

The list below details the ports currently decoded by IP Office Monitor. For a full list of assigned non-IP Office ports see http://www.iana.org/assignments/port-numbers.

- 20 File Transfer [Default Data]
- 21 File Transfer [Control]
- 23 Telnet
- 25 Simple Mail Transfer
- 37 Time
- 43 Who Is
- 53 Domain Name Server
- 67 Bootstrap Protocol Server
- 68 Bootstrap Protocol Client
- 69 Trivial File Transfer
- 70 Gopher
- 79 Finger
- 80 World Wide Web-HTTP
- 115 Simple File Transfer Protocol
- 123 Network Time Protocol
- 137 NETBIOS Name Service
- 138 NETBIOS Datagram Service
- 139 NETBIOS Session Service
- 156 SQL Service
- 161 SNMP
- 162 SNMPTRAP
- 179 Border Gateway Protocol
- 1719 H.323Ras
- 1720 H.323/H.245
- 50791 IPO Voicemail
- 50792 IPO Network DTE
- 50793 IPO Solo Voicemail (i.e. Wave driver for TAPI)
- 50794 IPO Monitor
- 50795 IPO Voice Networking
- 50796 IPO PCPartner
- 50797 IPO TAPI
- 50798 IPO Who-Is response
- 50799 IPO BLF
- 50800 IPO License Dongle
- 50801 EConf

Protocols

IP Office Monitor, as well as displaying the Protocol number (in decimal) of packets, also displays the names of the more common Protocols. For example "pcol = 1" is decoded as "pcol = 1 (ICMP)".

Protocol numbers currently decoded by IP Office Monitor are:

- 1 - Internet Control Message [ICMP]
- 2 - Internet Group Management [IGMP]
- 6 - Transmission Control [TCP]
- 8 - Exterior Gateway Protocol [EGP]
- 9 - Interior Gateway Protocol [IGP]
- 17 - User Datagram [UDP]
- 41 - Ipv6 [IPV6]
- 46 - Reservation Protocol [RSVP]
- 47 - General Routing Encapsulation [GRE]
- 58 - ICMP for IPv6 [IPv6-ICMP]
- 111 - IPX in IP[IPX-In-IP]
- 115 - Layer Two Tunneling Protocol [L2TP]
- 121 - Simple Message Protocol [SMP]

10.14.15 Operating System Summary

This sections summarizes the support for IP Office applications by IP Office Release 8.1. Some specific features of applications may have additional requirements. Those requirements will be details in the specific installation manual for the application. Unless otherwise stated, the operating system is the latest supported version from the operating system developer.

Windows Operating System Support

The following table gives a summary of the operating systems on which the IP Office applications that are part of the IP Office Release 8.1 have been tested and are supported. While the applications may function of other operating systems, they have not been tested by Avaya and are not supported.

IP Office Application	Windows Clients								Windows Servers			
	XP Pro		Vista		Windows 7		Windows 8		2003	2008 R2		2012
	32	64	32	64	32	64	32	64	32	32	64	64
Voicemail Pro Server	✓	–	✓	–	✓	✓	✓	✓	✓	✓	✓	✓
... plus UMS	–	–	–	–	–	–	–	–	✓	✓	✓	✓
... plus campaigns	–	–	–	–	–	–	–	–	✓	✓	✓	✓
Voicemail Pro Client	✓	✓	✓	✓	✓	✓	✓	✓	✓	✓	✓	✓
ContactStore	✓	–	✓	✓	–	–	–	–	✓	✓	✓	✓
one-X Portal for IP Office	–	–	–	–	–	–	–	–	✓	✓	✓	✓
Customer Call Reporter	–	–	–	–	–	–	–	–	✓	✓	✓	–
SoftConsole	✓	–	✓	✓	✓	✓	✓	✓	–	–	–	–
IP Office Manager	✓	✓	✓	✓	✓	✓	✓	✓	✓	✓	✓	✓
System Monitor	✓	✓	✓	✓	✓	✓	✓	✓	✓	✓	✓	✓
System Status Application	✓	✓	✓	✓	✓	✓	✓	✓	✓	✓	✓	✓
TAPI - 1st Party	✓	✓	✓	✓	✓	✓	✓	✓	–	–	–	–
TAPI - 3rd Party	✓	–	✓	✓	✓	✓	✓	✓	✓	✓	✓	✓

- Vista support is only on Business, Enterprise and Ultimate versions.
- Windows 7 support is only on Professional, Enterprise and Ultimate versions.

Virtual Server Support

For IP Office Release 8.1, all applications supported on Windows server operating systems are supported while running on the following virtual servers:

- **VMWare.**
- **Microsoft Virtual Server.**
- **Microsoft Server Hyper-V.**

Browser Application Support

Some applications are accessed using web browsers. The table below lists the browsers tested by Avaya.

Application	Windows					Mac
	Internet Explorer	Firefox	Opera	Safari	Chrome	Safari
IP Office Application Server	✓ 7+	✓ 3+	✓ 2+	✓ 3.2+	–	✓ 3.2+
Voicemail Pro UMS	✓ 7+	✓ 3+	✓ 2+	✓ 3.2+	–	✓ 3.2+
one-X Portal for IP Office	✓ 7+	✓ 3.5+	–	✓ 5+	✓	✓ 5+
Customer Call Reporter	✓ 7+	✓ 3+	✓ 2+	✓ 3.2+	✓	✓ 3.2+
ContactStore 7.8	✓ 7+	–	–	–	–	–
System Status Application	✓ 7+	✓ 3+	–	–	–	–
Web Management	✓ 8 only	✓ 3.6+	–	✓ 4+	–	–

Microsoft Outlook Support

Application\Outlook Version	2003	2007	2010
Voicemail Pro IMS	✓	–	–
Voicemail Pro UMS/IMAP	✓	✓	✓

TAPI Dialing	✓	✓	✓
one-X Portal for IP Office plug-in for Outlook	–	✓	✓

10.15 Physical Ports

The following port types are found on IP Office systems:

- **ANALOG** 392
  Used for the connection of external analog trunks.
- **AUDIO** 392
  Used for input of an external music on hold source.
- **BRI** 394
  Used for connection of BRI trunks (Quad BRI trunk card). In IP Office Essential Edition they can also be used for ISDN terminals devices (So8 module).
- **DC I/P** 395
  Power input from external power supply unit.
- **DS** 395
  Connection of Avaya digital station phones supported by IP Office.
- **RS232/DTE** 155
  Used for control unit maintenance under Avaya guidance. On expansion modules not used.
- **EF** 396
  Emergency power failure ports found on the ETR6 base card.
- **ETR** 397
  Only supported on IP500 V2 control unit running in IP Office Basic Edition - PARTNER® Mode or IP Office Basic Edition - Quick Modes.
- **EXPANSION** 398
  Used for interconnection of external expansions modules and control units.
- **EXT O/P** 146
  Used to control external relay systems. The port provides two switchable (on, off and pulse) controls.
- ⏚
  Used for connection of functional or protective ground if required.
- **LAN** 399
  10/100Mbps Ethernet LAN ports.
- **PF** 400
  Analog power fails ports.
- **PHONE** 401 **(POT)** 401
  Analog phone extension ports. On older units these ports are labeled as POT ports.
- **PRI** 403
  PRI trunk ports.
- **TCM** 404
  Connection for M-Series and T-Series phones supported by IP Office. Also for Digital Mobility Solution system supporting 4100 Series and 7400 Series phones.
- **USB**
  Not used.

10.15.1 Cables

The IP Office systems are designed primarily for use within an RJ45 structured cabling system using CAT3 unshielded twisted-pair (UTP) cabling and RJ45 sockets.

A structured cabling system is one where cables are run from a central RJ45 patch panel in the communications/data room to individual RJ45 sockets at user locations. All wires in each cable between the patch panel and the desk socket are connected straight through. This arrangement allows devices connected at the patch panel to be swapped to match the type of device that needs to be connected at the user socket. For example, making one user socket a phone port and another user socket a computer LAN port, without requiring any rewiring of the cables between the patch panel and the user location.

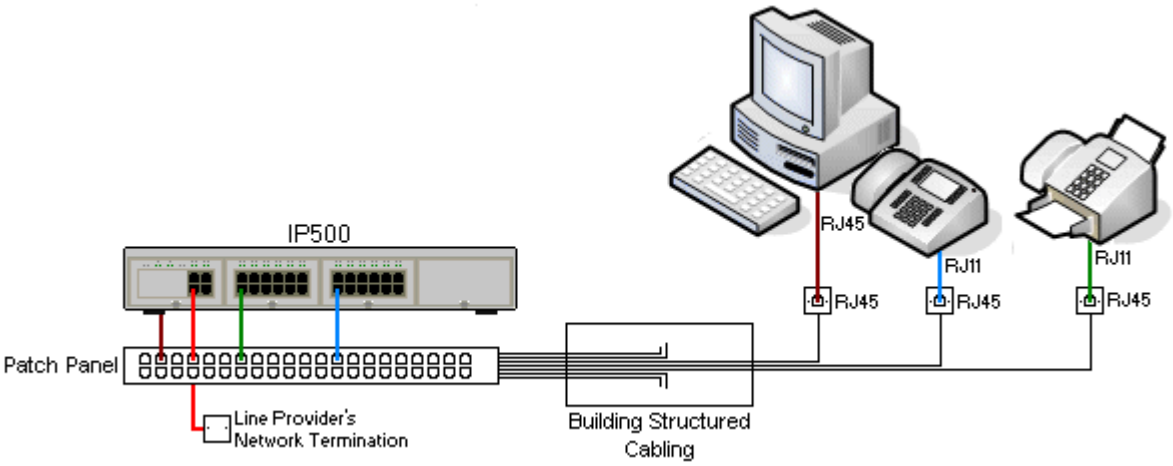

- **Traditional IDC Punchdown Wiring Installations**
  Where necessary, the far end RJ45 plug can be stripped from IP Office cables and wired into traditional wiring systems using punch-block connectors. This type of installation should be performed by an experienced wiring technician.
- **Trunk Connections**
  The majority of IP Office trunk ports use RJ45 connectors for acceptance of an RJ45-to-RJ45 cable. However, connection at the line provider's end may require use of a different plug type in order to match the line providers equipment.
- **RJ11 Phone Connectors**
  Many phones use RJ11 sockets and are supplied with RJ11-to-RJ11 cables. RJ11 plugs can be inserted into RJ45 sockets and in many case the connection will work. However this is not recommended or supported as the connection lock is not truly positive and may become disconnected. An RJ45-to-RJ11 cable 395 is available for these connections.

Standard IP Office Cables

The following are Avaya standard cables available for use with IP Office systems. The maximum length is applicable if the standard Avaya cable is replaced with an alternate cable.

Cable	Description	SAP Code	Standard Length	Maximum Length
9-Way DTE Cable 155	Connects to control unit RS232 DTE port. 9-Way D-type plug to 9-way D-type socket.	–	2m/6'6''.	2m/6'6''.
Structured Cabling DS Line Cable 395	Connects from RJ45 sockets to RJ11 socketed DS and analog phones.	TT700047871	4m/13'2''.	See table below.
BRI/PRI Trunk Cable 394	Connects BRI/PRI trunk ports to the line provider's network termination point. RJ45 to RJ45. Red.	700213440	3m/9'10''.	–
Expansion Interconnect Cable 398	Connects the control unit to expansion modules. RJ45 to RJ45. Blue. May be replaced by a yellow interconnect cable (2m (6'6") - 700472871) supplied with the IP500 4-Port Expansion 218 card when using that card.	700213457	1m/3'3''.	1m/3'3''.
LAN Cable 399	Connects from IP Office LAN ports to IP devices. RJ45 to RJ45. Grey.	700213481	3m/9'10''.	100m/328'.

The table below details the maximum total cable distances for DS and analog extensions using different cable types.

Telephone	Unshielded Twisted-Pair (UTP) - 50nf/Km			CW1308
	AWG22 (0.65mm)	AWG24 (0.5mm)	AWG26 (0.4mm)	
1400 Series	1200m/3937'.	1000m/3280'.	670m/2200'.	400m/1310'.
2400/5400 Series	1200m/3937'.	1000m/3280'.	670m/2200'.	400m/1310'.
4406D Phone	1000m/3280'.	1000m/3280'.	400m/1310'.	400m/1310'.
4412D Phone	1000m/3280'.	700m/2295'.	400m/1310'.	400m/1310'.
4424D	500m/1640'.	500m/1640'.	400m/1310'.	400m/1310'.
9500 Series	1200m/3937'.	1000m/3280'.	670m/2200'.	400m/1310'.
T3 Series (Upn)	1000m/3280'.	1000m/3280'.	400m/1310'.	–
TCM (without power booster)	–	305m/1000'	–	–
" (with power booster)	–	790m/2600'	–	–
Analog Phones	1000m/3280'.	1000m/ 3280'.	400m/1640'.	800m/2620'.
ETR Phones	305m/1000'.	305m/1000'.	122m/400'.	122m/400'.

10.15.2 ANALOG Port

These ports are analog trunk ports. The IP400 ATM4 analog trunk cards and IP500 analog trunk cards only support loop-start trunks. The ATM16 Analog Trunk module supports both loop-start and ground-start trunks, switchable within the IP Office configuration.

ANALOG	Pin	Description
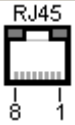	1	Not used.
	2	Not used.
	3	Not used.
	4	Ring.
	5	Tip.
	6	Not used.
	7	Not used.
	8	Not used.

- **Off-Hook Current:** 25mA.
- **IMPORTANT**
  In all IP Office installations, any module being used for analog trunk connections must be connected to a functional earth 41.
- **WARNING**
  Within the Republic of South Africa and in areas of high lightning risk, any module using analog trunk connections must be connected to a protective ground 41 and to surge protection equipment 42.

10.15.3 AUDIO Port

This port is found on the rear of all IP Office control units. It is used for the input of an external music-on-hold sound source. Note that if the IP Office has loaded an internal music-on-hold sound file, any input from this socket is ignored.

The port is a 3.5mm stereo jack socket suitable for use with the most standard audio leads and connection to the 'headphone' output socket of most audio systems.

The use of a 'headphone' socket allows simple volume adjustment. Connection via a 'Line Out' socket may require additional equipment in order to adjust the volume level.

Pin No.	Description
Common	Common
Left	Audio In - Left Channel.
Right	Audio In - Right - Channel.

- Input impedance: 10k /channel. Maximum a.c. signal – 200mV rms.

10.15.4 BRI Port (So)

The BRI ports found on the front of the So8 module are BRI So interface ports for connect to ISDN terminal devices. For IP Office 4.2+, IP500 BRI trunk daughter cards can be switched from To to So mode. IP400 BRI trunk cards can only be used as To connections 394.

IP Office			Wire	ISDN Terminal	
RJ45	Pin	BRI		PIN	RJ45
	1	–	White/Orange	1	
	2	–	Orange/White	2	
	3	⬅Rx-A	White/Green	3	
	4	➡Tx-B	Blue/White	4	
	5	➡Tx-A	White/Blue	5	
	6	⬅Rx-B	Green/White	6	
	7	–	White/Brown	7	
	8	–	Brown/White	8	

- **Terminating Resistors**
  100ohm Terminating resistors are required across the transmit and receive wire pairs at each end of the S-bus.
  - The IP Office So8 module BRI ports include integral 100ohm terminating resistors.
  - For IP Office 4.2+, individual ports of an IP500 BRI daughter card can be switched to So mode. This is done by setting the **Line Sub-Type** to ***S-Bus*** in the IP Office configuration. In this case terminating resistors must be added at the IP Office end in addition to those at the other end of the S-bus connection.
    - Addition of the necessary termination at the IP Office end can be done using an IP500 BRI So Converter Cable (700458649). This short (25cm/10") cable includes both the necessary terminating resistors and the cable cross-over.
  - Many ISDN terminal devices includes terminating resistors. If this is not the case, 100ohm (+/-5%) resistors must be connected across the receive wire pair and the transmit wire pair in the junction box immediately before the last ISDN terminal on the S-bus.

10.15.5 BRI Port (To)

These ports are BRI To interface ports for connection to external BRI trunk services. Note that BRI ports found on the IP400 So8 module are BRI-S interface ports for connect to ISDN terminal devices, see BRI Port (So) 393.

PRI/BRI Trunk Cable

This cable is used to connect from IP Office BRI/PRI trunk ports to the line providers network termination equipment. If that equipment does not use RJ45 sockets, the cable may need to be stripped and rewired or an alternate cable used. The appropriate signal pin-outs and wire colours are detailed below.

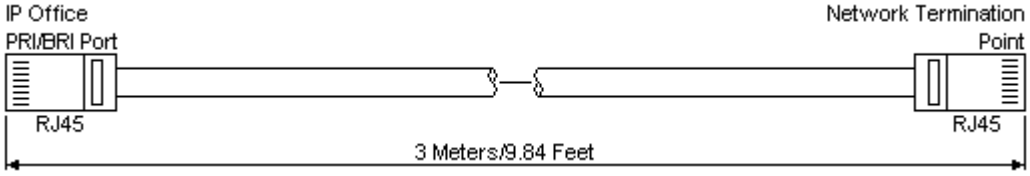

IP Office				Wire	Network Termination	
BRI	RJ45	BRI	PRI		PIN	RJ45
RJ45 8 1	1	–	⬅Rx-A	White/Orange	1	RJ45 8 1
	2	–	⬅Rx-B	Orange/White	2	
	3	➡Tx-A	–	White/Green	3	
	4	⬅Rx-A	➡Tx-A	Blue/White	4	
	5	⬅Rx-B	➡Tx-B	White/Blue	5	
	6	➡Tx-B	–	Green/White	6	
	7	–	–	White/Brown	7	
	8	–	–	Brown/White	8	

- Supply: BRI/PRI trunks cards are not supplied with these cables.
- Cable Color: Red.
- SAP Code: 700213440.
- Standard Length: 3m/9'10".
- Maximum Length: 5m/16'5''.
- Though not used pins 7 and 8 are through connected for ease of construction.

10.15.6 DC I/P Port

Found on all IP Office control units and expansion modules. Used for connection from the external power supply unit 36 supplied with the control unit or module.

- No other type of power supply unit should be used with the module or module unless specifically indicated by Avaya.
- Power cords must not be attached to the building surface or run through walls, ceilings, floors and similar openings.

10.15.7 DS Ports (RJ45)

These ports are used for connection from an RJ45 structured cabling system to digital station phones supported by the IP Office. DS ports are provided by IP500 Digital Station Cards 225, IP500 ATM Combination Cards 220, IP500 BRI Combination Cards 222 and IP500 Digital Station 243 external expansion modules.

Though the RJ11 to RJ11 cables supplied with some phones can be plugged directly into RJ45 ports including those on IP Office modules, this is not recommend as the connection lock is not positive and may become disconnected.

DS ports on Digital Station V1/V2 expansion modules can be connected to out-of-building extensions 42. If this is the case, connection must be made via suitable protective devices at each end and via each building primary protection. In addition the Digital Station module must be connected to a protective ground.

DS ports on IP Office control units must not be connected to out-of-building extensions.

Structured Cabling Line Cord

This is an RJ45 to RJ11 cable suitable for connection from a structured cabling system RJ45 port to a DS phone. It can also be used for two-wire analog phone extensions.

This cable is not suitable for connection from an Avaya 1151D1/B2 power supply unit to a DS phone with a 4450, EU24 or XM24 add-on module. In those cases the cables supplied with the power supply unit and the add-on module should be used.

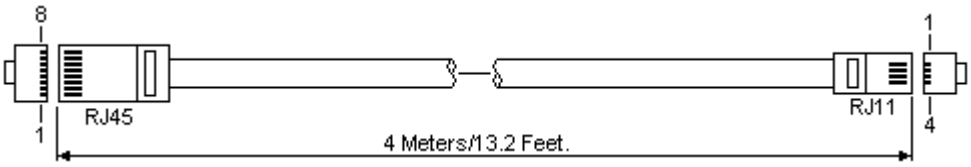

IP Office			Phone	
DS Port	**Pin**	**Description**	**Pin**	**Port**
RJ45 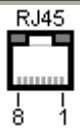	**1**	Not used.	**–**	RJ11
	2	Not used.	**1**	
	3	Not used.	**2**	
	4	Signal 1.	**3**	
	5	Signal 2.	**4**	
	6	Not used.	**5**	
	7	Not used.	**6**	
	8	Not used.	**–**	

- SAP Code: T700047871.

10.15.8 EF Port

These ports are found on the ETR6 base card. They are analog trunk ports that are only useable when the card is fitted with an IP500 analog trunk daughter card. When in power fail, the EF ports are connected to trunk port 12.

10.15.9 RS232 DTE Port

These ports are found on the rear of all IP Office control units and external expansion modules. The DTE ports on external expansion modules are not used.

The RS232 DTE ports on the control units can be used for system maintenance and connection of serial terminal adaptors. On IP400 control units the port can also be used for connection of the IP Office serial port licence key dongle.

An asynchronous terminal program such as HyperTerminal is also required. Configure this for operation via a PC serial port, as follows:

Bits per second	38,400	**Parity**	None	**Flow Control**	None
Data bits	8	**Stop Bits**	1	**Settings | Emulation**	TTY

DTE Cables

These cables are used for system maintenance and diagnostics under Avaya guidance. They can also be used for connection of RS232 serial terminal adaptor equipment to the IP Office control unit. The cable required depends on the IP Office control unit. This cable is a "Straight through DB9 female to DB9 male serial cable".

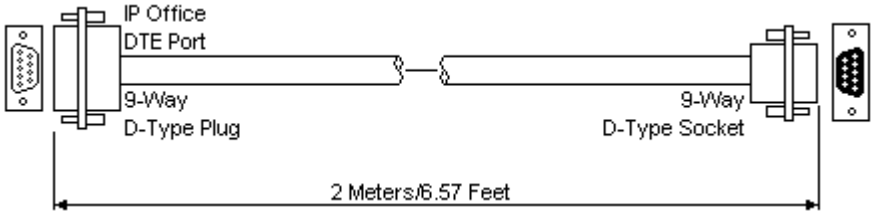

IP Office 9-Way RS232 DTE Port	Signal	PC/Terminal Adaptor
3	⬅ Receive data	3
2	➡ Transmit Data	2
7	⬅ RTS (Request To Send)	7
8	➡ CTS (Clear To Send)	8
6	➡ DSR (Data Set Ready)	6
5	● Ground	5
1	➡ DCD (Data Carrier Detect)	1
4	⬅ DTR (Data Terminal Ready)	4
9	➡ RI (Ring Indicator)	9

10.15.10 ETR Port

ETR (Enhanced Tip and Ring) ports are provided by the ETR6 base card. They can be used for the connection of DTMF analog phone devices and Avaya ETR phones.

- Paging to external paging equipment is not supported via ETR6 ports. It is supported via POT ports.

10.15.11 EXPANSION Port

This type of port is found on the rear of IP Office control units and external expansion modules. It is used for connecting the external expansion modules to there parent IP Office control unit.

The connection between these ports should only be done using an Avaya Expansion Interconnect Cable. No other cable type should be used.

- Each external expansion module is supplied with a blue 1 meter (3'3'') expansion interconnect cable. This cable must be used when connecting to expansion ports on the rear of a control unit.
- When connecting to expansion ports on an IP500 4-Port Expansion card, a yellow 2 meter (6'6") expansion interconnect cable can be used in place of the standard blue cable. 4 Yellow cables are supplied with the IP500 4-Port Expansion card.

Expansion Interconnect Cable
The Expansion Interconnect cable is used to link expansion ports between the IP Office control unit and external expansion modules.

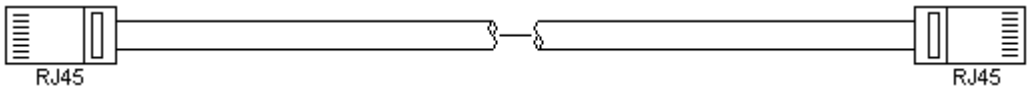

- Supply: One cable is normally supplied with each external expansion module.
- SAP Code: 1m (3'3") Blue cable - 700213457, 2m (6'6") Yellow cable - 700472871.

10.15.12 EXT O/P Port

These ports are found on the rear of all IP Office control units. They are used for connection to external switching relays. The port uses a standard 3.5mm stereo jack plug for connection.

The IP Office is able to open (high resistance), close (low resistance) or pulse (close for 5 seconds and then open) two switches within the port. Either switch can be operated separately. These switches are intended for activation of external relays in systems such as door opening systems.

- **CAUTION:** In installations where this port is connected to a device external to the building, connection must be via a towerMAX SCL/8 Surge Protector and a protective ground connection must be provided on the IP Office control unit.

EXT O/P	Pin	Description
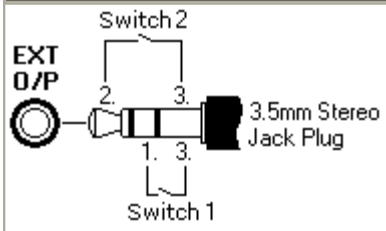	1	Switch 1.
	2	Switch 2.
	3	0 Volts (Ground/Chassis)

- Switching Capacity: 0.7A.
- Maximum Voltage: 55V d.c.
- On state resistance: 0.7 ohms.
- Short circuit current: 1A.
- Reverse circuit current capacity: 1.4A.
- Ensure that pins 1 and 2 are always at a positive voltage with respect to pin 3.

3.5mm stereo audio jack plugs are frequently sold as pre-wired sealed modules. It may be necessary to use a multi-meter to determine the wiring connections from an available plug. Typically 3 (common to both relays) is the cable screen.

10.15.13 LAN Port

These ports are found on IP Office control units. They are used for connection to IP LANs and IP devices.

All IP Office LAN ports are 10/100Mbps auto-sensing. Operation varies as follows:

- **IP Office 500** / **IP500 V2**
  The ports are full-duplex 10/100Mbps auto-sensing, MDI crossover ports. They form a managed layer 3 Ethernet switch. The WAN port is not supported on systems running in IP Office Basic Edition - PARTNER® Mode, IP Office Basic Edition - Norstar Mode or IP Office Basic Edition - Quick Modes.

The LEDs are used as follows:

- Green: On = connected, Flashing = Activity.
- Yellow: On = 100Mbps, Off = 10Mbps.

LAN Cables
These are CAT5 UTP cables for connection of various IP devices within the IP Office system.

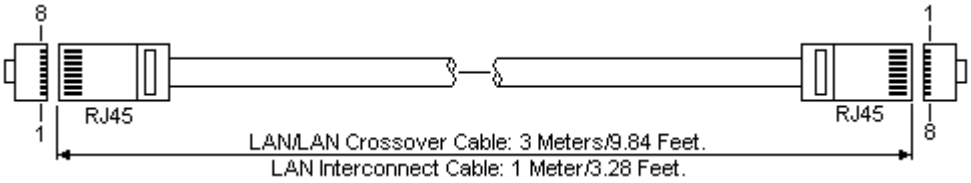

IP Office							
LAN	**Pin**	**MDIX (Normal)**	**MDI (Crossover)**	**Wire**	**Standard/ Interconnect**	**Crossover**	
RJ45 8 1	1	⬅Rx-A.	➡Tx-A.	White/Orange	1	3	RJ45 8 1
	2	⬅Rx-B.	➡Tx-B.	Orange/White	2	6	
	3	➡Tx-A.	⬅Rx-A.	White/Green	3	1	
	4	Not used.	Not used.	Blue/White	4	4	
	5	Not used.	Not used.	White/Blue	5	5	
	6	➡Tx-B.	⬅Rx-B.	Green/White	6	2	
	7	Not used.	Not used.	White/Brown	7	7	
	8	Not used.	Not used.	Brown/White	8	8	

- **SAP Code:**
  - **LAN Cable - GREY: 700213481.**
    Standard straight LAN cable.
  - **LAN Crossover Cable - Black: 700213473.**
    LAN crossover cable.

10.15.14 PF Port

These ports are found on the rear of the IP400 Analog Trunk expansion module. They are analog extension ports that can be used in conjunction with analog loop-start trunks during power failure to the IP Office system.

Any phones connected to these ports should be clearly labeled as power fail extensions in accordance with the appropriate national and local regulatory requirements.

PF	Pin	Description
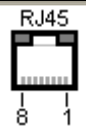	1	Not used.
	2	Pin 2 is internally connected to pin 5 via a ringer capacitor.
	3	Not used.
	4	Ring.
	5	Tip.
	6	Pin 6 is internally connected to pin 5 via a ringer capacitor.
	7	Not used.
	8	Not used.

- Minimum Wire Size: AWG 26.
- Maximum Cable Length:
  - AWG26: 500m / 1640'.
  - AWG24, AWG22: 1000m / 3280'.

10.15.15 PHONE (POT) Port

These ports are analog extension ports. On older IP Office units these ports were labeled as POT ports rather than PHONE ports.

PHONE ports on Phone V1/V2 expansion modules can be connected to out-of-building extensions 42. If this is the case, connection must be made via suitable protective devices (IP Office Barrier Box) at each end and via each building primary protection. In addition the Phone module must be connected to a protective ground.

PHONE ports on IP Office control units must not be connected to out-of-building extensions.

PHONE	Pin	Description
RJ45 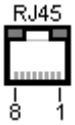	1	Not used.
	2	Not used.
	3	Not used.
	4	Ring.
	5	Tip.
	6	Not used.
	7	Not used.
	8	Not used.

- REN: 2
- Off-Hook Current: 25mA.
- Ring Voltage:
  - IP500 Control Unit and IP400 Phone Modules: 40V rms
  - IP500 V2 Control Unit, IP500 Phone Modules and IP400 Phone V2 Modules: 49V rms.
- Minimum Wire Size: AWG 26.
- Maximum Cable Length:
  - AWG26: 0.5km / 1640 feet.
  - AWG24, AWG22: 1km / 3280 feet.

Except on some older equipment, these ports do not include a ringing capacitor. Therefore for connection to 4-wire analog phones where this is a requirement (typically the United Kingdom and New Zealand), connection should be via a Master socket containing ringing capacitors. On some older IP403 control units and IP400 Phone V1 modules, pins 2 and 6 are internally connected via ringing capacitors.

Structured Cabling Line Cord

This is an RJ45 to RJ11 cable suitable for connection from a structured cabling system RJ45 port to a DS phone. It can also be used for two-wire analog phone extensions.

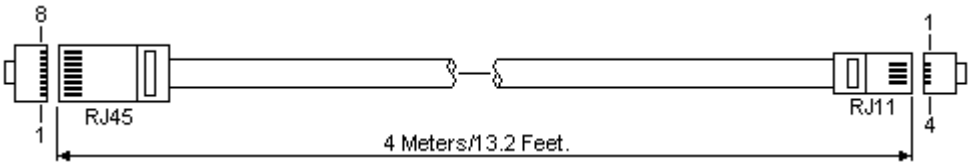

IP Office			Phone	
DS Port	Pin	Description	Pin	Port
RJ45	1	Not used.	–	RJ11
	2	Not used.	1	
	3	Not used.	2	
	4	Signal 1.	3	
	5	Signal 2.	4	
	6	Not used.	5	
	7	Not used.	6	

	8	Not used.	–	

- SAP Code: T700047871.

10.15.16 PRI Port

These ports are used for connection to PRI trunk services including E1, T1 and E1-R2.

PRI Trunk Cable

This cable is used to connect from IP Office PRI trunk ports to the line providers network termination equipment. If that equipment does not use RJ45 sockets, the cable may need to be stripped and rewired or an alternate cable used. The appropriate signal pin-outs and wire colours are detailed below.

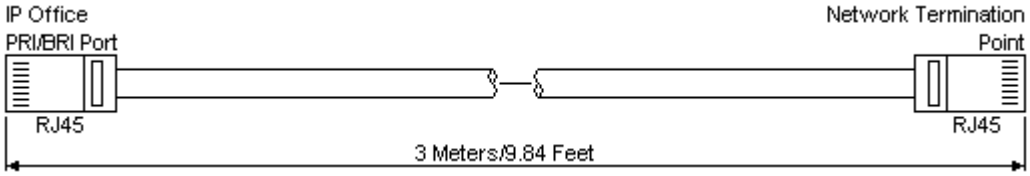

IP Office			Wire	Network Termination	
RJ45		PRI		PIN	RJ45
RJ45 8 1	1	⬅Rx-A	White/Orange	1	RJ45 8 1
	2	⬅Rx-B	Orange/White	2	
	3	–	White/Green	3	
	4	➡Tx-A	Blue/White	4	
	5	➡Tx-B	White/Blue	5	
	6	–	Green/White	6	
	7	–	White/Brown	7	
	8	–	Brown/White	8	

- Supply: PRI trunks cards are not supplied with these cables.
- Cable Color: Red.
- SAP Code: 700213440.
- Standard Length: 3m/9'10".

10.15.17 TCM Port (RJ21)

These ports are found on IP500 Digital Station 16A/30A 245 external expansion modules. These are supported by IP500 V2 systems running IP Office Release 7.0 and higher. They are used for supported M-Series and T-Series digital stations. They are also used for 4100 and 7400 Series phone support by connection to a Digital Mobility Solution 366 system.

Cable lengths up to 305 m (1000 ft) using 0.5mm (24AWG) wires do not require a power booster. For TCM phones, lengths up to 790 m (2600 ft) are supported if an auxiliary power supply booster is used.

1st RJ21 Connector

Port		Pin	Wire
1	Tip	26	White/Blue
	Ring	1	Blue/White
2	Tip	27	White/Orange
	Ring	2	Orange/White
3	Tip	28	White/Green
	Ring	3	Green/White
4	Tip	29	White/Brown
	Ring	4	Brown/White
5	Tip	30	White/Slate
	Ring	5	Slate/White
6	Tip	31	Red/Blue
	Ring	6	Blue/Red
7	Tip	32	Red/Orange
	Ring	7	Orange/Red
8	Tip	33	Red/Green
	Ring	8	Green/Red
9	Tip	34	Red/Brown
	Ring	9	Brown/Red
10	Tip	35	Red/Slate
	Ring	10	Slate/Red
11	Tip	36	Black/Blue
	Ring	11	Blue/Black
12	Tip	37	Black/Orange
	Ring	12	Orange/Black
13	Tip	38	Black/Green
	Ring	13	Green/Black
14	Tip	39	Black/Brown
	Ring	14	Brown/Black
15	Tip	40	Black/Slate
	Ring	15	Slate/Black
16	Tip	41	Yellow/Blue
	Ring	16	Blue/Yellow
Not Used		42	Yellow/Orange
		17	Orange/Yellow
		43	Violet/Slate
		08	Slate/Violet

2nd RJ21 Connector

Port		Pin	Wire
1	Tip	26	White/Blue
	Ring	1	Blue/White
2	Tip	27	White/Orange
	Ring	2	Orange/White
3	Tip	28	White/Green
	Ring	3	Green/White
4	Tip	29	White/Brown
	Ring	4	Brown/White
5	Tip	30	White/Slate
	Ring	5	Slate/White
6	Tip	31	Red/Blue
	Ring	6	Blue/Red
7	Tip	32	Red/Orange
	Ring	7	Orange/Red
8	Tip	33	Red/Green
	Ring	8	Green/Red
9	Tip	34	Red/Brown
	Ring	9	Brown/Red
10	Tip	35	Red/Slate
	Ring	10	Slate/Red
11	Tip	36	Black/Blue
	Ring	11	Blue/Black
12	Tip	37	Black/Orange
	Ring	12	Orange/Black
13	Tip	38	Black/Green
	Ring	13	Green/Black
14	Tip	39	Black/Brown
	Ring	14	Brown/Black
Not Used		40	Black/Slate
		15	Slate/Black
		41	Yellow/Blue
		16	Blue/Yellow
		42	Yellow/Orange
		17	Orange/Yellow
		43	Violet/Slate
		08	Slate/Violet

10.16 Licences

Various IP Office features and applications require entry of licenses 405 into the system's configuration. The licenses are unique 32-character codes based on the feature being activated and the serial number of the feature key dongle 250 installed with the IP Office system.

The serial number is printed on the feature key dongle and prefixed with **SN** (IP500) or **FK** (IP500 V2). It can also be viewed in the system configuration using IP Office Manager.

- For IP500 and IP500 V2 systems, the feature key dongle takes the form of a card (smart media or SD card respectively) inserted into the control unit. The card is a mandatory item for these systems even if they use no licensed features.

When a license is entered into the IP Office configuration, the following information is shown.

- **Status**
  The status, which is ***Unknown*** until the configuration file is sent back to the IP Office system.
  - ***Unknown***
    This status is shown for licenses that have just been added to the configuration shown in IP Office Manager. Once the configuration has been sent back to the IP Office and then reloaded, the status will change to one of those below.
  - ***Valid***
    The features licensed can be configured and used.
  - ***Invalid***
    The license was not recognized. It did not match the serial number of the Feature Key.
  - ***Dormant***
    The license is valid but is conditional on some other pre-requisite that is not currently meet.
  - ***Obsolete***
    The license is valid but is one no longer used by the level of software running on the system.
  - ***Expired***
    The license has gone past its expiry date.
- **License**
  The name of the licensed feature. This may differ from the ordered RFA name.
- **Instances**
  Depending on the license, this may be the number of ports enabled or number of simultaneous users of the licensed feature. Sometime the number of instances is specified in the license name.
- **Expires**
  Most purchased licenses have no expiry setting. For some features, trial licenses may be available which will have an expiry date.

10.16.1 System Edition Licenses

These license are used to set what range of features the IP Office system supports.

- **Essential Edition :** *IPO R8+ ESSNTL EDITION+ LIC - 267786.*
  For Release 8.0 and higher, this license is required for IP500 V2 systems to run in IP Office Essential Edition. It is therefore a pre-requisite to the **Preferred Edition** and **Advanced Edition** licenses on those systems. This license is not required for systems running IP Office Basic Edition - PARTNER® Mode, IP Office Basic Edition - Norstar Mode or IP Office Basic Edition - Quick Mode.
    - For systems upgraded to 8.0 or higher, a **Virtual Essential Edition** license is automatically added to the system configuration as part of the upgrade. See Upgrade Licenses 407.
  - **Essential Edition Additional Voicemail Ports :** *IPO LIC R6 ESSNTL EDDITION ADD 2 - 229423.*
    For IP500 V2 only. Unlicensed, the Embedded Voicemail provided by the system supports 2 simultaneous connections and 15 hours of storage. This can be expanded up to 6 channels by the addition of licenses, each of which enables an additional two channels. For IP Office Release 7.0+ each license also enables an additional 5 hours of storage.
- **Preferred Edition (Voicemail Pro) :** *IPO LIC PREFRD R8+ VMPRO - 269480.*
  This license enables support for Voicemail Pro as the IP Office's voicemail server with 4 voicemail ports. The **Preferred Edition** license allows the voicemail server to provide the services listed below. For IP Office Release 8.0 and higher, an **Essential Edition** license is a pre-requisite for this license on IP500 V2 systems.
    - Mailboxes for all users and hunt groups.
    - Announcements for users and hunt groups.
    - Customizable call flows.
    - Call recording to mailboxes.
    - Campaigns.
    - TTS email reading for users licensed to **Mobile Worker** or **Power User** profiles.
    - Use of **Conference Meet Me** functions.

    1. For IP Office Release 8.0 and higher, a **Preferred Edition** system license 406 is a pre-requisite for any user profile licenses.
       - For system's upgrade to IP Office Release 8.0 or higher, user profiles licenses are valid without the need for a **Preferred Edition** license. See **Upgrade Licenses** 407.
       - In a Small Community Network, the **Preferred Edition** license of the central system is automatically shared with other systems in the network, enabling user profile licenses on those other systems. However, each system supporting a Voicemail Pro server still requires its own **Preferred Edition** license for Voicemail Pro operation.
    2. For a IP500 V2 system fitted with an Unified Communications Module, the presence of the card acts as an automatic **Preferred Edition** license.
- **Advanced Edition**
  This license enables the additional features listed below. A **Preferred Edition** license is a pre-requisite for this license. For IP Office Release 8.0 and higher, an **Essential Edition** license is also a pre-requisite for this license on IP500 V2 systems.
    - *IPO LIC R6 ADV EDITION RFA LIC:DS - 229424.*
    - *IPO LIC R6 ADV EDITION TRIAL RFA LIC:DS - 229425.*
    - Support for Customer Call Reporter including 1 supervisor.
    - Voicemail Pro database interaction (IVR).[1]
    - Voicemail Pro Visual Basic Scripting.[1]
    - Voicemail Pro call recording to ContactStore.[3]
      - Voicemail Pro call flow generic TTS (8 ports).[1][2]

    1. Only supported on Windows based Voicemail Pro servers.
    2. Provides up to 8 ports of generic TTS for use with Speak Text actions within Voicemail Pro call flows. Not used for user TTS email reading. Not supported for Linux based voicemail servers.
    3. Note: In a Small Community Network using centralized voicemail, this license only enables ContactStore support for the central IP Office. Remote IP Offices in the network require their own Advanced Edition license or a **VMPro Recordings Administrator** license.

10.16.2 Upgrade Licenses

Existing IP Office systems being upgraded to IP Office Release 6.0 or higher may require a software upgrade license.

- **New IP500 V2 Systems**
  The behavior of new IP500 V2 systems depends on the level of software installed when the first call is made as follow:
  - **Pre-IP Office Release 8.0(46) or IP Office Release 8.1(52)**
    For 90 days from its first call, a new IP500 V2 control unit can run any IP Office Release supported on a IP500 V2 system without requiring an upgrade license. The highest level run is written into the control unit's memory (not the SD card) and becomes a permanent entitlement for that control unit. After 90 days, the IP500 V2 may require an upgrade license if upgraded to a software release higher than any it has run during the initial 90 day period.
  - **IP Office Release 8.0(46), IP Office Release 8.1(52) and higher**
    Systems installed with firmware 8.0(46) or 8.1(52) have no entitlement period after their first call. For those systems, even if in their first 90 day period, any subsequent upgrade to a higher major or minor release will require a software upgrade licence to be added to the system.
- **! Warning**
  Systems upgraded without the appropriate license will display *"No license available"* and will not allow any telephony functions.
- **Software Upgrade**
  Existing IP Office systems being upgraded to IP Office Release 6.0 or higher require an upgrade license. This applies to all IP Office system modes, for example IP Office IP Office Essential Edition, IP Office Basic Edition - Quick Mode, IP Office Basic Edition - Norstar Mode or IP Office Basic Edition - PARTNER® Mode.
  - IP Office Basic Edition - Quick Mode, IP Office Basic Edition - Norstar Mode and IP Office Basic Edition - PARTNER® Mode systems are automatically configured with either 48 or 100 users and so cannot use a **Small System Upgrade License**.
  - IP Office Essential Edition systems being upgraded to IP Office Release 8.0 or higher also require a **Essential Edition** 406 system license in order to operate. A virtual Essential Edition license is automatically added to the system configuration in response to the addition of a valid upgrade license.
  - **Small System Upgrade License:** *IPO LIC UPG R8.1 SML - 270680.*
    This license can be used to upgrade systems with up to 32 users and no external expansion modules.
  - **Large System Upgrade License:** *IPO LIC UPG R8.1 LARGE - 270399.*
    This license can be used to upgrade system with more than 32 users or with external expansion modules.

10.16.3 Trunk Licensing

The following trunks licenses can be used by a IP500/IP500 V2 system.

- **IP500 Universal PRI (Additional channels)**
  These licenses are used to enable additional B-channels above the basic 8 on an IP500 PRI-U card. The IP500 PRI-U card supports E1, T1 and E1-R2 PRI modes. The IP Office system supports 8 unlicensed B-channels on each IP500 PRI-U port fitted. Additional B-channels, up to the capacity of ports installed and PRI mode selected require licenses. These additional channels consume the licenses based on which additional channels are configured as in-service from port 9 of slot 1 upwards. D-channels are not affected by licensing.
  - *IP500 T1 CHANNELS ADD 2CH - 215180.*
  - *IP500 T1 CHANNELS ADD 8CH - 215181.*
  - *IP500 T1 CHANNELS ADD 32CH - 215182.*
  - *IP500 E1 CHANNELS ADD 2CH - 215183.*
  - *IP500 E1 CHANNELS ADD 8CH - 215184.*
  - *IP500 E1 CHANNELS ADD 22CH - 215185.*
  - *IP500 E1R2 CHANNELS ADD 2CH - 215186.*
  - *IP500 E1R2 CHANNELS ADD 8CH - 215187.*
  - *IP500 E1R2 CHANNELS ADD 22CH - 215188.*
- **SIP Trunk Channels**
  These licenses are used to configure the maximum number of simultaneous SIP trunk calls supported.
  - *IPO LIC SIP TRNK RFA 1 - 202967.*
  - *IPO LIC SIP TRNK RFA 5 - 202968.*
  - *IPO LIC SIP TRNK RFA 10 - 202969.*
  - *IPO LIC SIP TRNK RFA 20 - 202970.*
- **IP500 Voice Networking**
  These licenses are used with the IP500 and IP500 V2 systems to enable support for SCN, QSIG and H323 IP trunks. For IP Office Release 5, the additional ports license can be used without requiring a base license first.
  - *IP500 VOICE NTWKG ADD LIC RFA - 205650.*

10.16.4 Telephone/Endpoint Licenses

The use of H323 and SIP phones with IP Office Release 6.0+ is controlled by the following licenses. Different licenses are used for Avaya IP phones, non-Avaya phones (including non-Avaya softphones) and Avaya softphones.

- **Avaya IP Endpoints License**
  On IP500 and IP500 V2 systems, these licenses are used to license additional Avaya IP phones. This includes all 1600, 4600, 5600, 9600, IP DECT, DECT R4, T3 IP, Spectralink and VPN phones supported by IP Office Release 6.0.
  - *IPO LIC R6 AV IP ENDPOINT 1 - 229444.*
  - *IPO LIC R6 AV IP ENDPOINT 5 - 229445.*
  - *IPO LIC R6 AV IP ENDPOINT 20 - 229447.*
  - *IPO LIC R6 AV IP ENDPOINT 5 TRIAL - 229449.*
  - The system automatically licenses 12 Avaya IP phones for each IP500 VCM 32 and or IP500 VCM 64 card installed in the system without requiring additional licenses to be added to the configuration. This does not apply for IP500 VCM 32 V2 and IP500 VCM 64 V2 cards or IP500 Combination cards.
  - Additional Avaya IP phones are licensed either by the addition of **Avaya IP Endpoints** licenses above or the conversion of legacy **IP500 VCM Channels** licenses to **Channel Migration** licenses (see below).
  - By default licenses are consumed by each Avaya IP phone that registers with the IP Office in the order that they register. The license is released if the phone unregisters. However, it is possible to reserve a license for particular phones in order to ensure that those phones always obtain a license first if available. This is done through the **Reserve Avaya IP Endpoint Licence** setting of each IP extension.
  - **Warning**
    Avaya IP phones without a license will still be able to register but will be limited to making emergency calls only (Dial Emergency short code calls). The associated user will be treated as if logged off and the phone may display *"No license available"* and *"Emergency Calls Only".* If a license becomes available, it will be assigned to any unlicensed DECT handsets first and then to any other unlicensed Avaya IP phone in the order that the phones registered.
  - For existing IP500 systems upgraded to Release 6.0 or higher, existing VCM channels and IP500 VCM Channels license are treated as follows:
    - For each IP400 VCM card installed in the system, each VCM channel supported by the card allows support for 3 Avaya IP phones.
    - For each IP500 VCM 32 and IP500 VCM 64 card installed in the system, the 4 unlicensed VCM channels previously provided by each card are converted to allow unlicensed support of 12 Avaya IP phones. This does not apply for IP500 VCM 32 V2 and IP500 VCM 64 V2 cards and IP500 Combination cards.
    - For each legacy **IP500 VCM Channels** license, the license are converted **Channel Migration** licenses supporting 3 Avaya IP phones. See the Channel Migration license below.
  - The number of channels provided by an IP500 VCM 32 or IP500 VCM 64 card, up to a maximum of 32 or 64 respectively, depends on the actual codecs being used. Refer to IP500 VCM 230.
- **3rd Party IP Endpoints License**
  These licenses are used for support of non-Avaya IP phones including SIP extensions. The available license are used in order of phone registration. If no licenses are available the phone will not be able to register. Available licenses can reserved for a particular phone using the Reserve 3rd Party IP Endpoint License setting in the each IP extension. This license was previously called the **IP End-points** license.
  - *IP400 IP ENDPOINTS RFA 1 LIC - 174956.*
  - *IP400 IP ENDPOINTS RFA 5 LIC - 174957.*
  - *IP400 IP ENDPOINTS RFA 20 LIC - 174959.*

Legacy Endpoint Licenses

- **Channel Migration**
  These licenses were previously called **IP500 VCM Channels**. In pre-IP Office Release 6.0 systems, these license were used to enable additional VCM channels on IP500 VCM 32 and IP500 VCM 64 cards. For IP Office Release 6.0 these license are no longer required. Any present in the configuration of systems upgraded to IP Office Release 6.0 are renamed Channel Migration. Each Channel Migration license instance enables support for 3 Avaya IP phones.
  - *IPO LIC IP500 VCM LIC 4 CH LIC - 202961.*
  - *IPO LIC IP500 VCM LIC 8 CH LIC - 202962.*
  - *IPO LIC IP500 VCM LIC 16 CH LIC - 202963.*
  - *IPO LIC IP500 VCM LIC 28 CH LIC - 202964.*
  - *IPO LIC IP500 VCM LIC 60 CH LIC - 202965.*

10.16.5 User Licenses

This page is tagged for standard edition only.

The features available to a basic user can be enhanced by the addition of 'User Profile' licenses. Once these licenses are present in the system configuration, the profiles can be applied to selected users through the User | User | Profile setting in the system configuration.

	Basic User	Office Worker	Teleworker	Mobile Worker	Power User
one-X Portal Services	Yes*	Yes	Yes	–	Yes
" Telecommuter options	Yes*	–	Yes	–	Yes
UMS Web Services	Yes*	Yes	Yes	–	Yes
Mobility Features [2]	Yes*	–	–	Yes	Yes
TTS for Email Reading	–	–	–	Yes	Yes
IP Office SoftPhone	–	–	Yes	–	Yes
Remote Worker [3]	–	–	Yes	–	Yes
Flare Communicator for IP Office [4]	–	Yes	–	–	Yes

- * These features are supported for **Basic User** users on upgraded systems with the appropriate pre-IP Office 6.0 legacy licenses.

1. For IP Office Release 8.0 and higher, a **Preferred Edition** system license 406 is a pre-requisite for any user profile licenses.
   - For system's upgrade to IP Office Release 8.0 or higher, user profiles licenses are valid without the need for a **Preferred Edition** license. See **Upgrade Licenses** 407.
   - In a Small Community Network, the **Preferred Edition** license of the central system is automatically shared with other systems in the network, enabling user profile licenses on those other systems. However, each system supporting a Voicemail Pro server still requires its own **Preferred Edition** license for Voicemail Pro operation.
2. For IP Office Release 8.0, the mobility features are enabled for all users by the **Essential Edition** system license.
3. IP Office Release 8.0 supports users using remote H323 extensions. supports users using remote H323 extensions. Up to 4 Basic users are supported on remote extensions on system without needing to be licensed, ie. not configured and licensed for a user profile. Additional remote users are supported if licensed and configured for either a ***Teleworker*** or ***Power User*** user profile.
4. Supported for advanced Flare Communicator for IP Office usage if one-X Portal for IP Office and Voicemail Pro applications are also installed. If otherwise, only basic Flare Communicator for IP Office usage is supported. Basic Flare Communicator for IP Office usage can also be enabled for any user profile using a Avaya Softphone license.

- **Teleworker Profile License**
  These licenses set the number of users who can have their profile set as ***Teleworker***. For user with this optional, additional settings are enabled in the configuration for the following services: **one-X Portal for IP Office** with **Telecommuter** option **UMS Web Services** and **IP Office Video SoftPhone**. For IP Office Release 8.0 and higher, a **Preferred Edition** system license 406 is a pre-requisite.
  - *IPO LIC R6 TELEWORKER 1 - 229430.*
  - *IPO LIC R6 TELEWORKER 5 - 229431.*
  - *IPO LIC R6 TELEWORKER 20 - 229432.*
  - *IPO LIC R6 TELEWORKER 5 TRIAL - 229433.*
- **Mobile Worker Profile License**
  These licenses set the number of users who can have their profile set as **Mobile Worker**. For user with this optional, additional settings are enabled in the configuration for the following services: **Mobility Features** and **TTS for Email Reading**. For IP Office Release 8.0 and higher, all mobility features are enabled for all users by the **Essential Edition** license.
  - *IPO LIC R6 MOBILE WORKER 1 - 229434.*
  - *IPO LIC R6 MOBILE WORKER 5 - 229435.*
  - *IPO LIC R6 MOBILE WORKER 20 - 229436.*
  - *IPO LIC R6 MOBILE WORKER 5 TRIAL - 229437.*

- **Office Worker Profile License**
  These licenses set the number of users who can have their profile set as **Office Worker**. For user with this optional, additional settings are enabled in the configuration for the following services: **one-X Portal for IP Office** (no telecommuter features) and **UMS Web Services**. If no ***Office Worker Profile*** licenses are present, existing legacy ***Phone Manager Pro (per seat)*** licenses can be used to enable users for the **Office Worker** profile. For IP Office Release 8.0 and higher, a **Preferred Edition** system license 406 is a pre-requisite.
  - *IPO LIC R6 OFF WORKER RFA 1 - 229438.*
  - *IPO LIC R6 OFF WORKER RFA 5 - 229439.*
  - *IPO LIC R6 OFF WORKER RFA 20 - 229440.*
  - *IPO LIC R6 OFF WORKER 5 TRIAL - 229441.*

- **Power User Profile License**
  These licenses set the number of users who can have their profile set as **Power User**. For user with this optional, the same additional services as for Teleworker and Mobile Worker are enabled for the user in the configuration plus the following service: <%**SOFTPHONE%>**. For IP Office Release 8.0 and higher, a **Preferred Edition** system license 406 is a pre-requisite.
  - *IPO LIC R6 PWR USER 1 - 229426.*
  - *IPO LIC R6 PWR USER 5 - 229427.*
  - *IPO LIC R6 PWR USER 20 - 229428.*
  - *IPO LIC R6 PWR USER 5 TRIAL - 229429.*

- **User Profile Upgrade Licenses**
  These licenses are supported for IP Office Release 8.0 and higher. They can be used to upgrade existing user profile licenses. For IP Office Release 8.0 and higher, a **Preferred Edition** system license 406 is a pre-requisite.
  - *IPO R8+ MOBILE TO PWR USER UPG 5 - 267802.*
  - *IPO R8+ OFF WORKER TO PWR USER UPG 5 - 267803.*

Other User Licenses

In addition to the user profile licenses above, the following individual user licenses are available:

- **Receptionist:** *IPO LIC RECEPTIONIST RFA - 171987.*
  This license is used to enable support for the IP Office SoftConsole application. This license can only be used by users set to **Receptionist** in the IP Office configuration. A maximum of 4 receptionist are supported. This license was previously called **SoftConsole**.
  - For IP Office Release 6.0 and 6.1, an instance of this license is consumed by each user configured as a **Receptionist**. If the user hot desks to another IP Office system in an SCN, their license entitlement is retained, ie. the remote system does not require a **Receptionist** license.
  - For IP Office Release 7.0+, instances of this license are only consumed when the user is using the IP Office SoftConsole application. If the user hot desks to another IP Office system in an SCN, that system requires an available license in its configuration.
- **Avaya Softphone**
  This license can be used to enable support for basic Flare Communicator for IP Office usage on IP500 V2 systems when either one-X Portal for IP Office or Voicemail Pro is not available. The license can be used with any user profile including ***Basic User***.
- **CCR User Agent**
  See Customer Call Reporter licenses 416.

Legacy User Licenses

The following licenses are no longer available from Avaya but are still supported for systems upgraded to IP Office 6.0 or higher:

- **Mobility Features**
  These legacy licenses were used to enable mobility features, for example mobile twinning or mobile call control, for users set to the ***Basic User*** profile. For IP Office Release 8.0 and higher, the mobile twinning mobility feature is automatically enabled for all users.
  - *IPO LIC MOBILE WORKER RFA 1 - 195569.*
  - *IPO LIC MOBILE WORKER RFA 5 - 195570.*
  - *IPO LIC MOBILE WORKER RFA 20 - 195572.*
- **one-X Portal for IP Office**
  These legacy licenses were used to enable one-X Portal for IP Office support for users set to the ***Basic User*** profile. The licenses were purchased as part of the IP Office 5 Power User license packages.
- **UMS Web Services**
  These licenses are used to allow UMS voicemail services for hunt groups. For non-IP Office Server Edition systems, these licenses can also be used to enable UMS voicemail services support for users set to the **Basic User** profile, other users are enabled for UMS through their licensed user profile.
  - *IPO LIC VMPRO UMS 1 USER - 217880.*
  - *IPO LIC VMPRO UMS 5 USER - 217881.*
  - *IPO LIC VMPRO UMS 20 USER - 217883.*

10.16.6 Voicemail Pro Licenses

For IP Office Release 6.0 and higher, support for Voicemail Pro is enable by the addition of the following licenses.

- **Essential Edition :** *IPO R8+ ESSNTL EDITION+ LIC - 267786.*
  For Release 8.0 and higher, this license is required for IP500 V2 systems to run in IP Office Essential Edition. It is therefore a pre-requisite to the **Preferred Edition** and **Advanced Edition** licenses on those systems. This license is not required for systems running IP Office Basic Edition - PARTNER® Mode, IP Office Basic Edition - Norstar Mode or IP Office Basic Edition - Quick Mode.
    - For systems upgraded to 8.0 or higher, a **Virtual Essential Edition** license is automatically added to the system configuration as part of the upgrade. See Upgrade Licenses 407.
- **Preferred Edition (Voicemail Pro) :** *IPO LIC PREFRD R8+ VMPRO - 269480.*
  This license enables support for Voicemail Pro as the IP Office's voicemail server with 4 voicemail ports. The **Preferred Edition** license allows the voicemail server to provide the services listed below. For IP Office Release 8.0 and higher, an **Essential Edition** license is a pre-requisite for this license on IP500 V2 systems.
    - Mailboxes for all users and hunt groups.
    - Announcements for users and hunt groups.
    - Customizable call flows.
    - Call recording to mailboxes.
    - Campaigns.
    - TTS email reading for users licensed to **Mobile Worker** or **Power User** profiles.
    - Use of **Conference Meet Me** functions.

    1. For IP Office Release 8.0 and higher, a **Preferred Edition** system license 406 is a pre-requisite for any user profile licenses.
       - For system's upgrade to IP Office Release 8.0 or higher, user profiles licenses are valid without the need for a **Preferred Edition** license. See **Upgrade Licenses** 407.
       - In a Small Community Network, the **Preferred Edition** license of the central system is automatically shared with other systems in the network, enabling user profile licenses on those other systems. However, each system supporting a Voicemail Pro server still requires its own **Preferred Edition** license for Voicemail Pro operation.
    2. For a IP500 V2 system fitted with an Unified Communications Module, the presence of the card acts as an automatic **Preferred Edition** license.
- **Advanced Edition**
  This license enables the additional features listed below. A **Preferred Edition** license is a pre-requisite for this license. For IP Office Release 8.0 and higher, an **Essential Edition** license is also a pre-requisite for this license on IP500 V2 systems.
    - *IPO LIC R6 ADV EDITION RFA LIC:DS - 229424.*
    - *IPO LIC R6 ADV EDITION TRIAL RFA LIC:DS - 229425.*
    - Support for Customer Call Reporter including 1 supervisor.
    - Voicemail Pro database interaction (IVR).[1]
    - Voicemail Pro Visual Basic Scripting.[1]
    - Voicemail Pro call recording to ContactStore.[3]
      - Voicemail Pro call flow generic TTS (8 ports).[1][2]

    1. Only supported on Windows based Voicemail Pro servers.
    2. Provides up to 8 ports of generic TTS for use with Speak Text actions within Voicemail Pro call flows. Not used for user TTS email reading. Not supported for Linux based voicemail servers.
    3. Note: In a Small Community Network using centralized voicemail, this license only enables ContactStore support for the central IP Office. Remote IP Offices in the network require their own Advanced Edition license or a **VMPro Recordings Administrator** license.
- **Preferred Edition Additional Voicemail Ports**
  The required license for Voicemail Pro server support (Preferred Edition (Voicemail Pro)) also enables 4 voicemail ports. These licenses can be used to add additional voicemail ports up to the maximum capacity of the IP Office system (IP500 = 40, IP500 V2 = 40). This license was previously called **Additional Voicemail Pro (ports)**.
    - *IPO LIC VM PRO RFA 2 LIC - 174459.*
    - *IPO LIC VM PRO RFA 4 LIC - 174460.*
    - *IPO LIC VM PRO RFA 8 LIC - 174461.*
    - *IPO LIC VM PRO RFA 16 LIC - 174462.*
- **VMPro Recordings Administrators :** *IPO LIC CONTACTSTORE RFA LIC - 187166.*
  To support ContactStore in a Small Community Network, IP Offices other than the central IP Office require either their own Advanced Edition license or this license.
- **VMPro Networked Messaging :** *IPO LIC NTWKD MSGING RFA LIC - 182297.*
  Enables VPNM (Voicemail Pro Networked Messaging) functionality within Voicemail Pro. This allows message exchange with remote Voicemail Pro systems and Avaya Interchange systems.

- **VMPro TTS (Generic) :** *IP400 3rd PARTY TTS LIC RFA - 182303.*
  This legacy license enables the use of text to speech facilities using third party TTS software with Voicemail Pro. One license per simultaneous instance of TTS usage. For IP Office Release 6 and higher this license is no longer used for user email reading. The IP Office Advance Edition license also enables 8 ports of generic TTS.
- **VMPro TTS (ScanSoft) :** *IPO R8+ TTS PRO RFA 1 - 268844.*
  This legacy license enables the use of text to speech facilities using Avaya supplied TTS software with Voicemail Pro running on a Windows server. One license per simultaneous instance of TTS usage. For IP Office Release 6 and higher this license is no longer used for user email reading.
- **VMPro TTS Professional :** *IPO R8+ TTS PRO RFA 1 LIC - 268844.*
  This license enables the use of text to speech facilities provided by Voicemail Pro running on a Linux based server. One license per simultaneous instance of TTS usage.
- **UMS Web Services**
  These licenses are used to allow UMS voicemail services for hunt groups. For non-IP Office Server Edition systems, these licenses can also be used to enable UMS voicemail services support for users set to the **Basic User** profile, other users are enabled for UMS through their licensed user profile.
  - *IPO LIC VMPRO UMS 1 USER - 217880.*
  - *IPO LIC VMPRO UMS 5 USER - 217881.*
  - *IPO LIC VMPRO UMS 20 USER - 217883.*

Legacy Voicemail Licenses

The following legacy licenses are still supported by IP Office Release 6.0 and higher.

- **UMS Web Services**
  These licenses are used to allow UMS voicemail services for hunt groups. For non-IP Office Server Edition systems, these licenses can also be used to enable UMS voicemail services support for users set to the **Basic User** profile, other users are enabled for UMS through their licensed user profile.
  - *IPO LIC VMPRO UMS 1 USER - 217880.*
  - *IPO LIC VMPRO UMS 5 USER - 217881.*
  - *IPO LIC VMPRO UMS 20 USER - 217883.*
- **VMPro Database Interface :** *IP400 3RD PARTY IVR LIC RFA - 182298.*
  This legacy license enables 3rd party database support within Voicemail Pro call flows. For IP Office Release 6.0 and higher this is also enabled by the **Advanced Edition** license.
- **VMPro VB Script :** *IP400 VB SCRIPTING LIC RFA - 182300.*
  This legacy license enables Visual Basic Script support with Voicemail Pro. For IP Office Release 6.0 and higher this is also enabled by the **Advanced Edition** license.

10.16.7 Customer Call Reporter Licenses

Support for the Customer Call Reporter application is enabled by the presence of an **Advanced Edition** license in the IP Office configuration. For system being upgraded, Customer Call Reporter can alternately be enabled by a legacy **CCR Sup** license or a **CCC Supervisor** and **CCR CCC Upg** license.

- **Essential Edition :** *IPO R8+ ESSNTL EDITION+ LIC - 267786.*
  For Release 8.0 and higher, this license is required for IP500 V2 systems to run in IP Office Essential Edition. It is therefore a pre-requisite to the **Preferred Edition** and **Advanced Edition** licenses on those systems. This license is not required for systems running IP Office Basic Edition - PARTNER® Mode, IP Office Basic Edition - Norstar Mode or IP Office Basic Edition - Quick Mode.
    - For systems upgraded to 8.0 or higher, a **Virtual Essential Edition** license is automatically added to the system configuration as part of the upgrade. See Upgrade Licenses 407.
- **Preferred Edition (Voicemail Pro) :** *IPO LIC PREFRD R8+ VMPRO - 269480.*
  This license enables support for Voicemail Pro as the IP Office's voicemail server with 4 voicemail ports. The **Preferred Edition** license allows the voicemail server to provide the services listed below. For IP Office Release 8.0 and higher, an **Essential Edition** license is a pre-requisite for this license on IP500 V2 systems.
    - Mailboxes for all users and hunt groups.
    - Announcements for users and hunt groups.
    - Customizable call flows.
    - Call recording to mailboxes.
    - Campaigns.
    - TTS email reading for users licensed to **Mobile Worker** or **Power User** profiles.
    - Use of **Conference Meet Me** functions.

    1. For IP Office Release 8.0 and higher, a **Preferred Edition** system license 406 is a pre-requisite for any user profile licenses.
       - For system's upgrade to IP Office Release 8.0 or higher, user profiles licenses are valid without the need for a **Preferred Edition** license. See **Upgrade Licenses** 407.
       - In a Small Community Network, the **Preferred Edition** license of the central system is automatically shared with other systems in the network, enabling user profile licenses on those other systems. However, each system supporting a Voicemail Pro server still requires its own **Preferred Edition** license for Voicemail Pro operation.
    2. For a IP500 V2 system fitted with an Unified Communications Module, the presence of the card acts as an automatic **Preferred Edition** license.
- **Advanced Edition**
  This license enables the additional features listed below. A **Preferred Edition** license is a pre-requisite for this license. For IP Office Release 8.0 and higher, an **Essential Edition** license is also a pre-requisite for this license on IP500 V2 systems.
    - *IPO LIC R6 ADV EDITION RFA LIC:DS - 229424.*
    - *IPO LIC R6 ADV EDITION TRIAL RFA LIC:DS - 229425.*
    - Support for Customer Call Reporter including 1 supervisor.
    - Voicemail Pro database interaction (IVR).[1]
    - Voicemail Pro Visual Basic Scripting.[1]
    - Voicemail Pro call recording to ContactStore.[3]
      - Voicemail Pro call flow generic TTS (8 ports).[1][2]

    1. Only supported on Windows based Voicemail Pro servers.
    2. Provides up to 8 ports of generic TTS for use with Speak Text actions within Voicemail Pro call flows. Not used for user TTS email reading. Not supported for Linux based voicemail servers.
    3. Note: In a Small Community Network using centralized voicemail, this license only enables ContactStore support for the central IP Office. Remote IP Offices in the network require their own Advanced Edition license or a **VMPro Recordings Administrator** license.
- **Customer Service Agent**
  These licenses enable the configuration of users as CCR agents. Multiple license can be added for up to the maximum of 150 agents. A license is consumed for each CCR agent logged in. If no more license are available, further agents cannot log in. This license was previous called **CCR Agent**.
    - *IPO LIC CUSTMR SVC AGT RFA 1 - 217650.*
    - *IPO LIC CUSTMR SVC AGT RFA 5 - 217651.*
    - *IPO LIC CUSTMR SVC AGT RFA 20 - 217653.*
- **Customer Service Supervisor**
  This license is used to enable support for CCR supervisor and wallboard accounts. Each license instance enables both 1 supervisor account and 1 wallboard account. Multiple license can be added for up to 30 supervisors/ wallboards.
    - *IPO LIC R6 CUSTMR SVC SPV 1 - 229442.*
    - *IPO LIC R6 CUSTMR SVC SPV 1 TRIAL - 229443.*

Legacy CCR Licenses

- **CCR Sup**
  These legacy licenses were used to enable support for the Customer Call Reporter application and CCR supervisors.
  - *IPO CUSTMR CALL REPORTER 1 SPV LIC RFA - 217655.*
  - *IPO CUSTMR CALL REPORTER 10 SPV LIC RFA - 217656.*
  - *IPO CUSTMR CALL REPORTER 20 SPV LIC RFA - 217657.*
- **CCR CCC Upg :** *IPO LIC CUSTMR CALL REPORTER UPG LIC RFA - 217658.*
  This license allows legacy CCC application licenses to be used for Customer Call Reporter.
  - **CCC Server -** Enables 1 supervisor, 1 wallboard and 5 agents.
  - **CCC Supervisors -** Enables the equivalent number of supervisors and wallboards.
  - **CCC Agents -** Enables the equivalent number of agents.

10.16.8 Trial Licenses

The following trial licenses can be requested. Each is valid for 60 days from the date of issue and can only be issued once for a particular system Feature Key serial number. Apart from that restriction the trial license works the same as a full license.

- **Essential Edition:** *IPO R8+ ESSENTIAL EDITION TRIAL LIC - 268842.**
- **Preferred Edition:** *IPO LIC PREFERRED (VM PRO) TRIAL RFA LIC:DS - 189782.**
- **Advanced Edition:** *IPO LIC R6 ADV EDITION TRIAL LIC:DS - 229425.**
- **Power User (5 Users):** *IPO LIC R6 PWR USER 5 TRIAL LIC:CU - 229429.**
- **Teleworker (5 Users):** *IPO LIC R6 TELEWORKER 5 TRIAL:CU - 229433.**
- **Mobile Worker (5 Users):** *IPO LIC R6 MOBILE WORKER 5 TRIAL CU - 229437.**
- **Office Worker (5 Users):** *IPO LIC R6 OFF WORKER 5 TRIAL CU - 229441.**
- **Customer Service Agent:** *IPO LIC CUSTMR SVC AGT RFA TRIAL 5 - 227053.**
- **Customer Service Supervisor:** *IPO LIC R6 CUSTMR SVC SPV 1 TRIAL - 229443.**
- **Avaya IP Endpoints (5 Extensions):** *IPO LIC R6 AVAYA IP ENDPOINT 5 TRIAL - 229449.*
- **Receptionist (1 User):** *IPO LIC RECEPTIONIST RFA 1 TRIAL LIC:CU - 189783.**
- **VMPro Networked Messaging:** *IPO LIC NTWKD MSGING TRIAL RFA LIC:DS - 189776.*
- **VMPro TTS (ScanSoft):** *IPO LIC AVAYA TTS TRIAL RFA 1 LIC:CU - 189778.*
- **VM Pro TTS (Generic):** *IPO LIC 3RD PRTY TTS TRIAL RFA LIC:CU - 189781.*
- **VMPro TTS (Linux Voicemail Pro):** *IPO R8+ TTS RFA 1 TRIAL LIC - 268845.*
- **Audix Voicemail:** *IPO LIC ACM CENTRAL VM TRIAL LIC:DS - 189786.*
- **IPSec Tunneling:** *IPO LIC IPSec VPN RFA TRIAL LIC:DS - 189806.*
- **SIP Trunk Channels:** *IPO LIC SIP TRUNKING TRIAL RFA 5 - 205820.*
- **IP500 Voice Networking:** *IPO LIC IP500 VCE NTWK ADD 4 TRIAL - 205823.*
- **CTI Link Pro :** *IPO LIC CTI RFA TRIAL - 263128*.

- *All new IP500 V2 systems are supplied with the indicated trial licenses.

10.16.9 Other Licenses

- **Receptionist:** *IPO LIC RECEPTIONIST RFA - 171987.*
  This license is used to enable support for the IP Office SoftConsole application. This license can only be used by users set to **Receptionist** in the IP Office configuration. A maximum of 4 receptionist are supported. This license was previously called **SoftConsole**.
  - For IP Office Release 6.0 and 6.1, an instance of this license is consumed by each user configured as a **Receptionist**. If the user hot desks to another IP Office system in an SCN, their license entitlement is retained, ie. the remote system does not require a **Receptionist** license.
  - For IP Office Release 7.0+, instances of this license are only consumed when the user is using the IP Office SoftConsole application. If the user hot desks to another IP Office system in an SCN, that system requires an available license in its configuration.
- **Audix Voicemail :** *IPO LIC ACM CENTRAL VM - 177467.*
  Enables IP Office to use a remote Intuity Audix or Modular Messaging system for voicemail rather than requiring a local voicemail server.
- **IPSec Tunneling :** *IPO LIC IPSEC VPN RFA - 182301.*
  Enables the IP Office to initiate and terminate IPSec and L2TP tunnels.

CTI Licenses

- **CTI Link Pro :** *IPO LIC CTI RFA - 171988*
  Enables CTI Link Pro functionality (TAPI Link Pro and DEVLink Pro).
- **Wave User :** *IPO LIC TAPI WAV RFA 4 - 177466*
  Allows streaming of WAV files, using TAPILink Pro, for 3rd party voice applications. This is a per user license. Note that TAPI WAV calls use system data channels taken from the same pools as used for voicemail ports. The maximum number of simultaneous TAPI WAV user calls and voicemail users is determined by the IP Office control unit type; IP500 = 40, IP500 V2 =40.

10.17 Hardware Software Compatibility

This page summarizes the hardware components supported on different releases of core software.

Control Units

Control Unit	1.0	1.1	1.2	1.3	1.4	2.0	2.1	3.0 DT	3.0	3.1	3.2	4.0	4.1	4.2	5.0	6.0	6.1	7.0	8.0	8.1
Small Office Edition	–	–	–	–	–	✓	✓	✓	✓	✓	✓	✓	✓	✓	–	–	–	–	–	–
IP401	✓	✓	✓	✓	✓	✓	✓	–	–	–	–	–	–	–	–	–	–	–	–	–
IP403	✓	✓	✓	✓	✓	✓	✓	✓	✓	✓	✓	–	–	–	–	–	–	–	–	–
IP406 V1	✓	✓	✓	✓	✓	✓	✓	✓	✓	✓	✓	–	–	–	–	–	–	–	–	–
IP406 V2	–	–	–	–	–	–	✓	✓	✓	✓	✓	✓ [1]	✓ [1]	✓ [1]	✓ [1]	✓ [1]	✓ [1]	–	–	–
IP412	–	–	–	–	–	–	✓	✓	✓	✓	✓	✓	✓	✓	✓	✓	✓	–	–	–
IP500	–	–	–	–	–	–	–	–	–	–	–	✓	✓	✓	✓	✓	✓	✓	✓	✓
IP500 V2	–	–	–	–	–	–	–	–	–	–	–	–	–	–	–	✓	✓	✓	✓	✓

1. For an IP406 V2 control unit to run IP Office Release 4.0 or higher software up to IP Office Release 6.1, the control unit must be PCS 8 or higher.

External Expansion Modules

Control Unit	1.0	1.1	1.2	1.3	1.4	2.0	2.1	3.0 DT	3.0	3.1	3.2	4.0	4.1	4.2	5.0	6.0	6.1	7.0	8.0	8.1
IP400 ATM16	–	–	–	–	–	–	✓	✓	✓	✓	✓	✓	✓	✓	✓	✓	✓	✓	✓	✓
IP400 DS16	–	–	–	–	–	–	✓	✓	✓	✓	✓	✓	✓	✓	✓	✓	✓	✓	✓	✓
IP400 DS30	–	–	–	–	–	–	✓	✓	✓	✓	✓	✓	✓	✓	✓	✓	✓	✓	✓	✓
IP400 DS16 V2	–	–	–	–	–	–	✓	✓	✓	✓	✓	✓	✓	✓	✓	✓	✓	✓	✓	✓
IP400 DS30 V2[4]	–	–	–	–	–	–	✓	✓	✓	✓	✓	✓	✓	✓	✓	✓	✓	✓	✓	✓
IP400 Phone 8	–	–	–	–	–	–	✓	✓	✓	✓	✓	✓	✓	✓	✓	✓	✓	✓	✓	✓
IP400 Phone 16	–	–	–	–	–	–	✓	✓	✓	✓	✓	✓	✓	✓	✓	✓	✓	✓	✓	✓
IP400 Phone 30	–	–	–	–	–	–	✓	✓	✓	✓	✓	✓	✓	✓	✓	✓	✓	✓	✓	✓
IP400 Phone 8	–	–	–	–	–	–	✓	✓	✓	✓	✓	✓	✓	✓	✓	✓	✓	✓	✓	✓
IP400 Phone 16 V2	–	–	–	–	–	–	✓	✓	✓	✓	✓	✓	✓	✓	✓	✓	✓	✓	✓	✓
IP400 Phone 30 V2	–	–	–	–	–	–	✓	✓	✓	✓	✓	✓	✓	✓	✓	✓	✓	✓	✓	✓
IP400 So8	–	–	–	–	–	–	✓	✓	✓	✓	✓	✓	✓	✓	✓	✓	✓	✓	✓	✓
IP400 WAN3	–	–	–	–	–	–	✓	✓	✓	✓	–	–	–	–	–	–	–	–	–	–
IP400 WAN3 10/100[1]	–	–	–	–	–	–	✓	✓	✓	✓	✓	✓	✓	✓	✓	✓	✓	–	–	–
IP500 ATM16[2]	–	–	–	–	–	–	✓	✓	✓	✓	✓	✓	✓	✓	✓	✓	✓	✓	✓	✓
IP500 So8	–	–	–	–	–	–	✓	✓	✓	✓	✓	✓	✓	✓	✓	✓	✓	✓	✓	✓
IP500 DS16	–	–	–	–	–	–	✓	✓	✓	✓	✓	✓	✓	✓	✓	✓	✓	✓	✓	✓
IP500 DS30	–	–	–	–	–	–	✓	✓	✓	✓	✓	✓	✓	✓	✓	✓	✓	✓	✓	✓
IP500 DS16A (RJ21)[3]	–	–	–	–	–	–	–	–	–	–	–	–	–	–	–	–	–	✓	✓	✓
IP500 DS30A (RJ21)[3]	–	–	–	–	–	–	–	–	–	–	–	–	–	–	–	–	–	✓	✓	✓
IP500 Phone 16 V2	–	–	–	–	–	–	✓	✓	✓	✓	✓	✓	✓	✓	✓	✓	✓	✓	✓	✓
IP500 Phone 30 V2	–	–	–	–	–	–	✓	✓	✓	✓	✓	✓	✓	✓	✓	✓	✓	✓	✓	✓

1. Not supported on IP500 and IP500 V2 systems.
2. North America only.
3. IP500 V2 systems only.
4. A maximum of sixteen 4424D telephones are supported on an IP400 DS30 V2 unless PCS05 or higher. PCS05 and higher units can support up to twenty-seven 4424D telephones.

Cards

IP500 Base Cards	1.0	1.1	1.2	1.3	1.4	2.0	2.1	3.0 DT	3.0	3.1	3.2	4.0	4.1	4.2	5.0	6.0	6.1	7.0	8.0	8.1
IP500 Phone 2	–	–	–	–	–	–	–	–	–	–	–	✓	✓	✓	✓	✓	✓	✓	✓	✓
IP500 Phone 8	–	–	–	–	–	–	–	–	–	–	–	✓	✓	✓	✓	✓	✓	✓	✓	✓
IP500 Digital Station 8	–	–	–	–	–	–	–	–	–	–	–	✓	✓	✓	✓	✓	✓	✓	✓	✓
IP500 Card Carrier	–	–	–	–	–	–	–	–	–	–	–	✓	✓	✓	✓	✓	✓	✓	✓	✓
IP500 VCM 32	–	–	–	–	–	–	–	–	–	–	–	✓	✓	✓	✓	✓	✓	✓	✓	✓
IP500 VCM 64	–	–	–	–	–	–	–	–	–	–	–	✓	✓	✓	✓	✓	✓	✓	✓	✓
IP500 VCM 32 V2	–	–	–	–	–	–	–	–	–	–	–	–	–	–	–	–	–	–	–	✓
IP500 VCM 64 V2	–	–	–	–	–	–	–	–	–	–	–	–	–	–	–	–	–	–	–	✓
IP500 4-Port Expansion	–	–	–	–	–	–	–	–	–	–	–	–	–	–	✓	✓	✓	✓	✓	✓
IP500 ETR6[1][2]	–	–	–	–	–	–	–	–	–	–	–	–	–	–	–	✓	✓	✓	✓	✓
IP500 ATM4 Combo Card [1]	–	–	–	–	–	–	–	–	–	–	–	–	–	–	–	✓	✓	✓	✓	✓
" PCS04 426 and higher[5]	–	–	–	–	–	–	–	–	–	–	–	–	–	–	–	–	✓	✓	✓	✓
IP500 ATM4 Combo Card V2[1]	–	–	–	–	–	–	–	–	–	–	–	–	–	–	–	–	–	–	–	✓
IP500 BRI Combo Card BRI[1]	–	–	–	–	–	–	–	–	–	–	–	–	–	–	–	✓	✓	✓	✓	✓
IP500 TCM 8[1]	–	–	–	–	–	–	–	–	–	–	–	–	–	–	–	–	–	✓	✓	✓
Unified Communications Module[1]	–	–	–	–	–	–	–	–	–	–	–	–	–	–	–	–	–	–	✓	✓

IP500 Trunk Cards	1.0	1.1	1.2	1.3	1.4	2.0	2.1	3.0 DT	3.0	3.1	3.2	4.0	4.1	4.2	5.0	6.0	6.1	7.0	8.0	8.1
IP500 Alog Trunk Card	–	–	–	–	–	–	–	–	–	–	–	✓	✓	✓	✓	✓	✓	✓	✓	✓
" PCS10 426 and higher[4]	–	–	–	–	–	–	–	–	–	–	–	–	–	–	–	–	✓	✓	✓	✓
IP500 Alog Trunk Card V2 [1]	–	–	–	–	–	–	–	–	–	–	–	–	–	–	–	–	–	–	–	✓ [3]
IP500 BRI 2 Trunk Card	–	–	–	–	–	–	–	–	–	–	–	✓	✓	✓	✓	✓	✓	✓	✓	✓
IP500 BRI 4 Trunk Card	–	–	–	–	–	–	–	–	–	–	–	✓	✓	✓	✓	✓	✓	✓	✓	✓
IP500 PRI-1U	–	–	–	–	–	–	–	–	–	–	–		✓	✓	✓	✓	✓	✓	✓	✓
IP500 PRI-2U	–	–	–	–	–	–	–	–	–	–	–		✓	✓	✓	✓	✓	✓	✓	✓

1. IP500 V2 systems only.
2. Only supported in IP Office Basic Edition - PARTNER® Mode or IP Office Basic Edition - Quick Mode (U-Law) modes running in a North American locale.
3. Supported for 8.1 Feature Pack 1 and higher.
4. These cards are support by IP Office Release 4.0 and higher. However, PCS10 and higher cards are only supported in systems running IP Office Release 6.1(20), 7.0(12) or 8.0 and higher. Refer to IP Office Technical Tip 237.
5. These cards are supported by IP Office Release 6.0 and higher. However, PCS04 and higher cards are only supported in systems running IP Office Release 6.1(20), 7.0(12) or 8.0 and higher. Refer to IP Office Technical Tip 237.

Phones

1000 Series

Phone	1.0	1.1	1.2	1.3	1.4	2.0	2.1	3.0 DT	3.0	3.1	3.2	4.0	4.1	4.2	5.0	6.0	6.1	7.0	8.0	8.1
1010	–	–	–	–	–	–	–	–	–	–	–	–	–	–	–	–	✓	✓	✓	✓
1040	–	–	–	–	–	–	–	–	–	–	–	–	–	–	–	–	✓	✓	✓	✓

1100/1200 Series

Phone	1.0	1.1	1.2	1.3	1.4	2.0	2.1	3.0 DT	3.0	3.1	3.2	4.0	4.1	4.2	5.0	6.0	6.1	7.0	8.0	8.1
1120E	–	–	–	–	–	–	–	–	–	–	–	–	–	–	–	–	✓	✓	✓	✓
1140E	–	–	–	–	–	–	–	–	–	–	–	–	–	–	–	–	✓	✓	✓	✓
1220	–	–	–	–	–	–	–	–	–	–	–	–	–	–	–	–	✓	✓	✓	✓
1230	–	–	–	–	–	–	–	–	–	–	–	–	–	–	–	–	✓	✓	✓	✓

1400 Series

Phone	1.0	1.1	1.2	1.3	1.4	2.0	2.1	3.0 DT	3.0	3.1	3.2	4.0	4.1	4.2	5.0	6.0	6.1	7.0	8.0	8.1
1403	–	–	–	–	–	–	–	–	–	–	–	–	–	–	–	✓	✓	✓	✓	✓
1408	–	–	–	–	–	–	–	–	–	–	–	–	–	–	–	✓	✓	✓	✓	✓
1416	–	–	–	–	–	–	–	–	–	–	–	–	–	–	–	✓	✓	✓	✓	✓

1600 Series

Phone	1.0	1.1	1.2	1.3	1.4	2.0	2.1	3.0 DT	3.0	3.1	3.2	4.0	4.1	4.2	5.0	6.0	6.1	7.0	8.0	8.1
1603[1]	–	–	–	–	–	–	–	–	–	–	–	–	–	✓	✓	✓	✓	✓	✓	✓
1603-I	–	–	–	–	–	–	–	–	–	–	–	–	–	–	–	✓	✓	✓	✓	✓
1603SW	–	–	–	–	–	–	–	–	–	–	–	–	–	–	✓	✓	✓	✓	✓	✓
1603SW-I	–	–	–	–	–	–	–	–	–	–	–	–	–	–	–	✓	✓	✓	✓	✓
1608[1]	–	–	–	–	–	–	–	–	–	–	–	–	–	✓	✓	✓	✓	✓	✓	✓
1608-I	–	–	–	–	–	–	–	–	–	–	–	–	–	–	–	✓	✓	✓	✓	✓
1616[1]	–	–	–	–	–	–	–	–	–	–	–	–	–	✓	✓	✓	✓	✓	✓	✓
1616-I	–	–	–	–	–	–	–	–	–	–	–	–	–	–	–	✓	✓	✓	✓	✓

1. 4.2 Q4 '08+.

20 Series

Phone	1.0	1.1	1.2	1.3	1.4	2.0	2.1	3.0 DT	3.0	3.1	3.2	4.0	4.1	4.2	5.0	6.0	6.1	7.0	8.0	8.1
2010	✓	✓	✓	✓	✓	✓	✓	✓	✓	–	–	–	–	–	–	–	–	–	–	–
2030	✓	✓	✓	✓	✓	✓	✓	✓	✓	–	–	–	–	–	–	–	–	–	–	–
2050	✓	✓	✓	✓	✓	✓	✓	✓	✓	–	–	–	–	–	–	–	–	–	–	–
20CC	✓	✓	✓	✓	✓	✓	✓	✓	✓	–	–	–	–	–	–	–	–	–	–	–
20DT	✓	✓	✓	✓	✓	✓	✓	✓	✓	✓	✓	✓	✓	✓	–	–	–	–	–	–

2400 Series

Phone	1.0	1.1	1.2	1.3	1.4	2.0	2.1	3.0 DT	3.0	3.1	3.2	4.0	4.1	4.2	5.0	6.0	6.1	7.0	8.0	8.1
2402D	–	–	–	–	–	–	–	–	✓	✓	✓	✓	✓	✓	✓	✓	✓	✓	✓	✓
2410D	–	–	–	–	–	–	–	–	✓	✓	✓	✓	✓	✓	✓	✓	✓	✓	✓	✓
2420	–	–	–	–	✓	✓	✓	✓	✓	✓	✓	✓	✓	✓	✓	✓	✓	✓	✓	✓

3600 Series

Phone	1.0	1.1	1.2	1.3	1.4	2.0	2.1	3.0 DT	3.0	3.1	3.2	4.0	4.1	4.2	5.0	6.0	6.1	7.0	8.0	8.1
3616	–	–	–	–	–	✓	✓	✓	✓	✓	✓	✓	✓	✓	✓	✓	✓	✓	✓	✓
3620	–	–	–	–	–	–	–	–	–	–	✓	✓	✓	✓	✓	✓	✓	✓	✓	✓
3626	–	–	–	–	–	✓	✓	✓	✓	✓	✓	✓	✓	✓	✓	✓	✓	✓	✓	✓
3641	–	–	–	–	–	–	–	–	–	–	–	✓	✓	✓	✓	✓	✓	✓	✓	✓
3645	–	–	–	–	–	–	–	–	–	–	–	✓	✓	✓	✓	✓	✓	✓	✓	✓

3700 Series

Phone	1.0	1.1	1.2	1.3	1.4	2.0	2.1	3.0 DT	3.0	3.1	3.2	4.0	4.1	4.2	5.0	6.0	6.1	7.0	8.0	8.1
3701	–	–	–	–	–	–	–	–	–	✓	✓	✓	✓	✓	✓	✓	✓	✓	✓	✓
3711	–	–	–	–	–	–	–	–	–	✓	✓	✓	✓	✓	✓	✓	✓	✓	✓	✓
3720	–	–	–	–	–	–	–	–	–	–	–	–	–	–	✓	✓	✓	✓	✓	✓
3725	–	–	–	–	–	–	–	–	–	–	–	–	–	–	✓	✓	✓	✓	✓	✓
3740	–	–	–	–	–	–	–	–	–	–	–	–	–	–	–	–	–	✓	✓	✓
3749	–	–	–	–	–	–	–	–	–	–	–	–	–	–	–	–	–	✓	✓	✓

3800/3900 Series

Phone	1.0	1.1	1.2	1.3	1.4	2.0	2.1	3.0 DT	3.0	3.1	3.2	4.0	4.1	4.2	5.0	6.0	6.1	7.0	8.0	8.1
3810	–	–	–	–	–	–	✓	✓	✓	✓	✓	✓	✓	✓	✓	✓	✓	✓	✓	✓
3910	–	–	–	–	–	–	–	–	–	–	–	–	–	–	–	✓	✓	✓	✓	✓
3920	–	–	–	–	–	–	–	–	–	–	–	–	–	–	–	✓	✓	✓	✓	✓

4100 Series

Phone	1.0	1.1	1.2	1.3	1.4	2.0	2.1	3.0 DT	3.0	3.1	3.2	4.0	4.1	4.2	5.0	6.0	6.1	7.0	8.0	8.1
4135	–	–	–	–	–	–	–	–	–	–	–	–	–	–	–	–	–	✓	✓	✓
4136	–	–	–	–	–	–	–	–	–	–	–	–	–	–	–	–	–	✓	✓	✓
4145	–	–	–	–	–	–	–	–	–	–	–	–	–	–	–	–	–	✓	✓	✓
4145EX	–	–	–	–	–	–	–	–	–	–	–	–	–	–	–	–	–	✓	✓	✓
4146	–	–	–	–	–	–	–	–	–	–	–	–	–	–	–	–	–	✓	✓	✓
4146EX	–	–	–	–	–	–	–	–	–	–	–	–	–	–	–	–	–	✓	✓	✓

4400 Series

Phone	1.0	1.1	1.2	1.3	1.4	2.0	2.1	3.0 DT	3.0	3.1	3.2	4.0	4.1	4.2	5.0	6.0	6.1	7.0	8.0	8.1
4406D	✓	✓	✓	✓	✓	✓	✓	✓	✓	✓	✓	✓	✓	✓	✓	✓	✓	✓	✓	✓
4412D	✓	✓	✓	✓	✓	✓	✓	✓	✓	✓	✓	✓	✓	✓	✓	✓	✓	✓	✓	✓
4424D	✓	✓	✓	✓	✓	✓	✓	✓	✓	✓	✓	✓	✓	✓	✓	✓	✓	✓	✓	✓

4600 Series

Phone	1.0	1.1	1.2	1.3	1.4	2.0	2.1	3.0 DT	3.0	3.1	3.2	4.0	4.1	4.2	5.0	6.0	6.1	7.0	8.0	8.1
4601	–	–	–	–	–	–	–	–	✓	✓	✓	✓	✓	✓	✓	✓	✓	✓	✓	✓
4602IP	–	–	–	✓	✓	✓	✓	✓	✓	✓	✓	✓	✓	✓	✓	✓	✓	✓	✓	✓
4602SW	–	–	–	✓	✓	✓	✓	✓	✓	✓	✓	✓	✓	✓	✓	✓	✓	✓	✓	✓
4606	✓	✓	✓	✓	✓	✓	✓	✓	✓	✓	✓	–	–	–	–	–	–	–	–	–
4610SW	–	–	–	–	–	–	–	–	✓	✓	✓	✓	✓	✓	✓	✓	✓	✓	✓	✓
4612	✓	✓	✓	✓	✓	✓	✓	✓	✓	✓	✓	–	–	–	–	–	–	–	–	–
4620	–	–	–	–	✓	✓	✓	✓	✓	✓	✓	✓	✓	✓	✓	✓	✓	✓	✓	✓
4621	–	–	–	–	–	–	–	–	–	✓	✓	✓	✓	✓	✓	✓	✓	✓	✓	✓
4624	✓	✓	✓	✓	✓	✓	✓	✓	✓	✓	✓	–	–	–	–	–	–	–	–	–
4625	–	–	–	–	–	–	–	–	–	–	✓	✓	✓	✓	✓	✓	✓	✓	✓	✓

5400 Series

Phone	1.0	1.1	1.2	1.3	1.4	2.0	2.1	3.0 DT	3.0	3.1	3.2	4.0	4.1	4.2	5.0	6.0	6.1	7.0	8.0	8.1
5402	–	–	–	–	–	–	–	–	✓	✓	✓	✓	✓	✓	✓	✓	✓	✓	✓	✓
5410	–	–	–	–	–	–	–	–	✓	✓	✓	✓	✓	✓	✓	✓	✓	✓	✓	✓
5420	–	–	–	–	–	–	–	–	✓	✓	✓	✓	✓	✓	✓	✓	✓	✓	✓	✓

5600 Series

Phone	1.0	1.1	1.2	1.3	1.4	2.0	2.1	3.0 DT	3.0	3.1	3.2	4.0	4.1	4.2	5.0	6.0	6.1	7.0	8.0	8.1
5601	–	–	–	–	–	–	–	–	✓	✓	✓	✓	✓	✓	✓	✓	✓	✓	✓	✓
5602IP	–	–	–	–	–	–	–	–	✓	✓	✓	✓	✓	✓	✓	✓	✓	✓	✓	✓
5602SW	–	–	–	–	–	–	–	–	✓	✓	✓	✓	✓	✓	✓	✓	✓	✓	✓	✓

Phone	1.0	1.1	1.2	1.3	1.4	2.0	2.1	3.0 DT	3.0	3.1	3.2	4.0	4.1	4.2	5.0	6.0	6.1	7.0	8.0	8.1
5610SW	–	–	–	–	–	–	–	–	✓	✓	✓	✓	✓	✓	✓	✓	✓	✓	✓	✓
5620	–	–	–	–	–	–	–	–	✓	✓	✓	✓	✓	✓	✓	✓	✓	✓	✓	✓
5621	–	–	–	–	–	–	–	–	–	–	✓	✓	✓	✓	✓	✓	✓	✓	✓	✓

6400 Series

Phone	1.0	1.1	1.2	1.3	1.4	2.0	2.1	3.0 DT	3.0	3.1	3.2	4.0	4.1	4.2	5.0	6.0	6.1	7.0	8.0	8.1
6408D	✓	✓	✓	✓	✓	✓	✓	✓	✓	✓	✓	✓	✓	✓	✓	✓	✓	–	–	–
6416D	✓	✓	✓	✓	✓	✓	✓	✓	✓	✓	✓	✓	✓	✓	✓	✓	✓	–	–	–
6424D	✓	✓	✓	✓	✓	✓	✓	✓	✓	✓	✓	✓	✓	✓	✓	✓	✓	–	–	–

7400 Series

Phone	1.0	1.1	1.2	1.3	1.4	2.0	2.1	3.0 DT	3.0	3.1	3.2	4.0	4.1	4.2	5.0	6.0	6.1	7.0	8.0	8.1
7420	–	–	–	–	–	–	–	–	–	–	–	–	–	–	–	–	–	✓	✓	✓
7430	–	–	–	–	–	–	–	–	–	–	–	–	–	–	–	–	–	✓	✓	✓
7434	–	–	–	–	–	–	–	–	–	–	–	–	–	–	–	–	–	✓	✓	✓
7439	–	–	–	–	–	–	–	–	–	–	–	–	–	–	–	–	–	✓	✓	✓
7440	–	–	–	–	–	–	–	–	–	–	–	–	–	–	–	–	–	✓	✓	✓
7444	–	–	–	–	–	–	–	–	–	–	–	–	–	–	–	–	–	✓	✓	✓
7449	–	–	–	–	–	–	–	–	–	–	–	–	–	–	–	–	–	✓	✓	✓

9000 Series

Phone	1.0	1.1	1.2	1.3	1.4	2.0	2.1	3.0 DT	3.0	3.1	3.2	4.0	4.1	4.2	5.0	6.0	6.1	7.0	8.0	8.1
9040	✓	✓	✓	✓	✓	✓	✓	✓	✓	✓	✓	–	–	–	–	–	–	–	–	–

9500 Series

Phone	1.0	1.1	1.2	1.3	1.4	2.0	2.1	3.0 DT	3.0	3.1	3.2	4.0	4.1	4.2	5.0	6.0	6.1	7.0	8.0	8.1
9504	–	–	–	–	–	–	–	–	–	–	–	–	–	–	–	–	–	✓	✓	✓
9508	–	–	–	–	–	–	–	–	–	–	–	–	–	–	–	–	–	✓	✓	✓

9600 Series

Phone	1.0	1.1	1.2	1.3	1.4	2.0	2.1	3.0 DT	3.0	3.1	3.2	4.0	4.1	4.2	5.0	6.0	6.1	7.0	8.0	8.1
9608	–	–	–	–	–	–	–	–	–	–	–	–	–	–	–	–	–	–	✓	✓
9611	–	–	–	–	–	–	–	–	–	–	–	–	–	–	–	–	–	–	✓	✓
9620L	–	–	–	–	–	–	–	–	–	–	–	–	–	–	–	✓	✓	✓	✓	✓
9620C	–	–	–	–	–	–	–	–	–	–	–	–	–	–	–	✓	✓	✓	✓	✓
9621	–	–	–	–	–	–	–	–	–	–	–	–	–	–	–	–	–	–	✓	✓
9630G	–	–	–	–	–	–	–	–	–	–	–	–	–	–	–	✓	✓	✓	✓	✓
9640	–	–	–	–	–	–	–	–	–	–	–	–	–	–	–	✓	✓	✓	✓	✓
9640G	–	–	–	–	–	–	–	–	–	–	–	–	–	–	–	✓	✓	✓	✓	✓
9641	–	–	–	–	–	–	–	–	–	–	–	–	–	–	–	–	–	–	✓	✓
9650	–	–	–	–	–	–	–	–	–	–	–	–	–	–	–	✓	✓	✓	✓	✓
9650C	–	–	–	–	–	–	–	–	–	–	–	–	–	–	–	✓	✓	✓	✓	✓

1. Release 8.0 2012 Q1 service pack and higher.

B100 Series

Phone	1.0	1.1	1.2	1.3	1.4	2.0	2.1	3.0 DT	3.0	3.1	3.2	4.0	4.1	4.2	5.0	6.0	6.1	7.0	8.0	8.1
B149	–	–	–	–	–	–	–	–	–	–	–	–	–	–	–	–	–	✓	✓	✓
B159	–	–	–	–	–	–	–	–	–	–	–	–	–	–	–	–	–	✓	✓	✓
B179	–	–	–	–	–	–	–	–	–	–	–	–	–	–	–	–	–	✓	✓	✓

D100 Series

Phone	1.0	1.1	1.2	1.3	1.4	2.0	2.1	3.0 DT	3.0	3.1	3.2	4.0	4.1	4.2	5.0	6.0	6.1	7.0	8.0	8.1
D160	–	–	–	–	–	–	–	–	–	–	–	–	–	–	–	–	–	–	–	✓[1]

1. Supported for 8.1 Feature Pack 1 and higher.

ETR Series

Phone	1.0	1.1	1.2	1.3	1.4	2.0	2.1	3.0 DT	3.0	3.1	3.2	4.0	4.1	4.2	5.0	6.0	6.1	7.0	8.0	8.1
ETR6	–	–	–	–	–	–	–	–	–	–	–	–	–	–	–	✓	✓	✓	✓	✓
ETR6D	–	–	–	–	–	–	–	–	–	–	–	–	–	–	–	✓	✓	✓	✓	✓
ERT18	–	–	–	–	–	–	–	–	–	–	–	–	–	–	–	✓	✓	✓	✓	✓
ETR18D	–	–	–	–	–	–	–	–	–	–	–	–	–	–	–	✓	✓	✓	✓	✓
ETR34	–	–	–	–	–	–	–	–	–	–	–	–	–	–	–	✓	✓	✓	✓	✓
ETR34D	–	–	–	–	–	–	–	–	–	–	–	–	–	–	–	✓	✓	✓	✓	✓

M-Series

Phone	1.0	1.1	1.2	1.3	1.4	2.0	2.1	3.0 DT	3.0	3.1	3.2	4.0	4.1	4.2	5.0	6.0	6.1	7.0	8.0	8.1
M7100	–	–	–	–	–	–	–	–	–	–	–	–	–	–	–	–	–	✓	✓	✓
M7100N	–	–	–	–	–	–	–	–	–	–	–	–	–	–	–	–	–	✓	✓	✓
M7208	–	–	–	–	–	–	–	–	–	–	–	–	–	–	–	–	–	✓	✓	✓
M7208N	–	–	–	–	–	–	–	–	–	–	–	–	–	–	–	–	–	✓	✓	✓
M7310	–	–	–	–	–	–	–	–	–	–	–	–	–	–	–	–	–	✓	✓	✓
M7310N	–	–	–	–	–	–	–	–	–	–	–	–	–	–	–	–	–	✓	✓	✓
M7324	–	–	–	–	–	–	–	–	–	–	–	–	–	–	–	–	–	✓	✓	✓
M7324N	–	–	–	–	–	–	–	–	–	–	–	–	–	–	–	–	–	✓	✓	✓

T-Series

Phone	1.0	1.1	1.2	1.3	1.4	2.0	2.1	3.0 DT	3.0	3.1	3.2	4.0	4.1	4.2	5.0	6.0	6.1	7.0	8.0	8.1
T7000	–	–	–	–	–	–	–	–	–	–	–	–	–	–	–	–	–	✓	✓	✓
T7100	–	–	–	–	–	–	–	–	–	–	–	–	–	–	–	–	–	✓	✓	✓
T7208	–	–	–	–	–	–	–	–	–	–	–	–	–	–	–	–	–	✓	✓	✓
T7316	–	–	–	–	–	–	–	–	–	–	–	–	–	–	–	–	–	✓	✓	✓
T7316E	–	–	–	–	–	–	–	–	–	–	–	–	–	–	–	–	–	✓	✓	✓
T7406	–	–	–	–	–	–	–	–	–	–	–	–	–	–	–	–	–	✓	✓	✓
T7406E	–	–	–	–	–	–	–	–	–	–	–	–	–	–	–	–	–	✓	✓	✓
ACU	–	–	–	–	–	–	–	–	–	–	–	–	–	–	–	–	–	✓	✓	✓

T3/T3IP Series

Phone	1.0	1.1	1.2	1.3	1.4	2.0	2.1	3.0 DT	3.0	3.1	3.2	4.0	4.1	4.2	5.0	6.0	6.1	7.0	8.0	8.1
T3 Compact	–	–	–	–	–	–	–	–	–	✓	✓	✓	✓	✓	✓	✓	✓	✓	✓	✓
T3 Classic	–	–	–	–	–	–	–	–	–	✓	✓	✓	✓	✓	✓	✓	✓	✓	✓	✓
T3 Comfort	–	–	–	–	–	–	–	–	–	✓	✓	✓	✓	✓	✓	✓	✓	✓	✓	✓
T3 IP Compact	–	–	–	–	–	–	–	–	–	–	–	✓	✓	✓	✓	✓	✓	✓	✓	✓
T3 IP Classic	–	–	–	–	–	–	–	–	–	–	–	✓	✓	✓	✓	✓	✓	✓	✓	✓
T3 IP Comfort	–	–	–	–	–	–	–	–	–	–	–	✓	✓	✓	✓	✓	✓	✓	✓	✓

10.18 Hardware PCS Levels

Each item of IP Office hardware has a Product Change Status (PCS) level. This is usually included on the label on the hardware.

The PCS level is increased each time a change is made to a component of that piece of hardware. For example the PCS level will be increased when a component is replaced by one from a different supplier.

Normally changes to a PCS level are not important and items of the same hardware but with different PCS levels are still identical in operation and can be interchanged. However, there are some exceptions as listed below.

- **IP500 Analog Trunk Card V1**
  These cards are support by IP Office Release 4.0 and higher. However, PCS10 and higher cards are only supported in systems running IP Office Release 6.1(20), 7.0(12) or 8.0 and higher. Refer to IP Office Technical Tip 237.
- **IP500 ATM4 Combination Card V1**
  These cards are supported by IP Office Release 6.0 and higher. However, PCS04 and higher cards are only supported in systems running IP Office Release 6.1(20), 7.0(12) or 8.0 and higher. Refer to IP Office Technical Tip 237.
- **IP406 V2 Control Unit**
  For this type of control unit to run IP Office Release 4.0 or higher software up to IP Office Release 6.1, the control unit must be PCS 8 or higher.
- **IP400 DS30 and 4424D Telephone Support**
  A maximum of sixteen 4424D telephones are supported on an IP400 DS30 V2 unless PCS05 or higher. PCS05 and higher units can support up to twenty-seven 4424D telephones.

10.19 TAA

Those items labeled as TAA are compliant with the requirements of the Trade Agreements Act which is a pre-requisite for federal purchases in the United States of America. Unless otherwise stated, the TAA variants of equipment are physically and functionally the same as the non-TAA variants.

		SAP Code
Control Unit	**IPO IP500 V2 CNTRL UNIT TAA** 209	700501510
Base Cards	**IPO IP500 EXTN CARD DGTL STA 8 TAA** 225	700501512
	IPO IP500 V2 COMB CARD ATM TAA 226	700501513
	IPO IP500 VCM 32 TAA 230	700501518
Trunk Daughter Cards	**IPO IP500 TRNK BRI 4 UNI TAA** 235	700501515
	IPO IP500 TRNK PRI UNVRSL SNGL TAA 236	700501514
	IPO IP500 TRNK PRI UNVRSL DUAL TAA 236	700501517
External Expansion Modules	**IPO IP500 EXP MOD ANLG TRNK 16 TAA** 239	700501511
	IPO IP500 EXP MOD DGTL STA 16 TAA 243	700501516

Chapter 11.
Safety Statements

11. Safety Statements

The Avaya IP400 Office and IP500 Office modules are intended to be installed by 'Service Personnel' and it is the responsibility of the Service Personnel to ensure that all subsidiary interconnected equipment is wired correctly and also meet the safety requirements of IEC60950 or UL60950 where applicable.

- CE
  The CE mark affixed to this equipment means that the module complies with the 1999/5/EC (R&TTE), 89/336/EEC (EMC) and 72/23EEC (LVD) Directives.
- The Declarations of Conformity (DoC) for the IP400 and IP500 products are available on the IP Office Application DVD.
- ⚠ This warning symbol is found on the base of IP500 modules.
- Refer to Trunk Interface Modules 429 for information concerning which Trunk Interface module variants are fitted in which country.

In Finland, Norway and Sweden a protective earthing conductor must be attached to the protective earth point on the rear of the IP500 and IP500 V2 Servers. See Grounding 96 for more information. In addition the Server must be located in a restricted access location where equipotential bonding has been applied, for example, in a telecommunication centre.

11.1 Lithium Batteries

A lithium battery is fitted to the real time clock on IP Office IP400 control unit motherboards and the IP500 control unit motherboard. .

⚠ WARNING
The Lithium battery must only be replaced by Avaya personnel or authorized representatives. There is a danger of explosion if the battery is incorrectly replaced. Replace only with the same or equivalent type recommended by the manufacturer. Dispose of used batteries according to the manufacturer's instructions.

11.2 Lightning Protection/Hazard Symbols

Lightning protectors
The buildings lightning protectors must be verified as follow:

1. Check the lightning protectors, at the trunk cable entry point to the building housing the Avaya IP Office, paying special attention to the lightning protection grounding. Report any problems, in writing, to the telephone company.
2. Equipment that is designed to be connected using internal wiring is typically not lightning protected. Hence, Avaya IP Office extension cabling must not leave the building. For installations where telephones and/or other standard (tip/ring) devices are installed in another building then lightning protection is required (see Out of Building Telephone Installations 42).

Hazard Symbol
The shock hazard symbol is intended to alert personnel to electrical hazard or equipment damage. The following precautions must also be observed when installing telephone equipment:

1. Never install telephone wiring during a lightning storm.
2. Never install telephone jacks in wet locations unless the jack is specifically designed for wet locations.
3. Never touch uninsulated telephone wires or terminals unless the telephone line has been disconnected at the network interface.
4. Always use caution when working with telephone lines.

11.3 Trunk Interface Modules

To ensure the validation of the approvals, only the following types of trunk interface cards must be fitted in the following IP Office control units.

USA/Canada						
Product	Quad BRI	PRI E1		PRI T1		Analog Trunk Card
		Single	Dual	Single	Dual	
IP500 V2	✗	✗	✗	✓	✓	✓
IP500	✗	✗	✗	✓	✓	✓

Rest of World						
Product	Quad BRI	PRI E1/E1R2		PRI T1		Analog Trunk Card
		Single	Dual	Single	Dual	
IP500 V2	✓	✓	✓	✗	✗	✓
IP500	✓	✓	✓	✗	✗	✓

Notes

- E1R2 trunks are only supported in CALA and Korea.

11.4 Further Information and Product Updates

Further information, including Product and Reference Manual updates, can be obtained from Avaya Dealers and Distributors or from Avaya's web site: http://www.avaya.com.

This guide is also available from the Avaya's support web site: http://support.avaya.com.

Support Telephone Numbers
For initial help and support, contact your distributor/supplier. The following contact points are for Avaya authorized partners.

- In the USA only
  Avaya provides a toll-tree Customer Helpline 24 hours a day:
  - Name: Avaya Technical Support Organization (TSO)
  - Customer Helpline: 1 800 628-2888
  - Address: 8744 Lucent Blvd., Highlands Ranch, Colorado, 80129 USA
  - URL: http://support.avaya.com
    If you need assistance when installing, programming, or using your system, call the Helpline or your Avaya representative. Consultation charges may apply.

- Outside the USA
  If you need assistance when installing, programming, or using your system, contact your Avaya representative.
  - URL: http://support.avaya.com

11.5 Port Safety Classification

The Avaya IP Office systems have the following ports which are classified as follows:

Port Name	Port Description	Port Classification
PRI port	PRI ISDN connection (NET)	TNV (Operating within the limits of SELV)
BRI ports	BRI ISDN connection (NET)	TNV (Operating within the limits of SELV)
Analog ports	Two wire analog trunk	TNV3
Power fail ports	Two wire analog trunk	TNV3
DTE port	Async Data connection.	SELV
Analog Telephone Ports	Telephone Extension ports	TNV2
Digital Telephone Ports	Telephone Extension ports	SELV
LAN ports	10/100 BaseT attachment to LAN.	SELV
Expansion ports	Expansion Module connector.	SELV
Audio port	Connector for Music on Hold.	SELV
External Control port	Connector for Controlling Ancillary circuits.	SELV
DC Input port	Connector for DC input power.	SELV

Interconnection circuits shall be selected to provide continued conformance with the requirements of EN 609050:1992/A3:1995 clause 2.3 for SELV circuits and with the requirements of clause 6 for TNV circuits, after connections between equipment.

11.6 EMC Directive

889/336/ EEC (EMC Directive) CISPR 22:1993 including A1 + A2, AS/NZ 3548:1995 (ROW)

- ⚠ **WARNING**
  This is a class A product. In a domestic environment this product may cause radio interference in which case the user may be required to take adequate measures.

Federal Communications Commission (FCC)

This equipment has been tested and found to comply with the limits for a Class A digital device, pursuant to Part 15 of the FCC Rules. These limits are designed to provide reasonable protection against harmful interference when the equipment is operated in a commercial environment. This equipment generates, uses, and can radiate radio frequency energy and, if not installed and used in accordance with the instruction manual, may cause harmful interference to radio communications. Operation of this equipment in a residential area is likely to cause harmful interference, in which case the user will be required to correct the interference at his or her own expense.

Canadian Department of Communications (DOC)

"NOTICE: This equipment meets the applicable Industry Canada Terminal Equipment Technical Specifications. This is confirmed by the registration number. The abbreviation, IC, before the registration number signifies that registration was performed based on a Declaration of Conformity indicating that Industry Canada technical specifications were met. It does not imply that Industry Canada approved the equipment."

EMC Caution for China

警示

注意：此为A级产品，在生活环境中，该产品可能会造成无线电干扰。在这种情况下，可能需要用户对其干扰采取切实可行的措施。仅适用于商业或工业环境。

11.7 Regulatory Instructions for Use

11.7.1 Australia

Connection
Connection of IP400 Office products must be via a Line Isolation Module with a telecommunications compliance label.

BRI Interface
During the configuration, ensure "000" emergency number is not barred, by performing the following:

- Short Code: 000
- Telephone No: 000;
- Function: DialEmergency

Connections to TS013, the following Bearer Capabilities shall not be used:

- 7kHz Audio, Video, Restricted Digital Information.

If unknown type of number is used in calling party number, the network will use the default CLI.

The system must be configured for Point to Multi point connection to comply with Austel requirements for connecting to TS013 circuits.

As the IP Office does not support emergency dialing after loss of power, the following warning notice should be recognized:

- **WARNING**
  This equipment will be inoperable when mains power fails.

PRI Interface
During the configuration, ensure "000" emergency number is not barred, by performing the following:

- Short Code: 000
- Telephone No: 000;
- Function: DialEmergency

- **WARNING**
  This equipment will be inoperable during mains power failure.

11.7.2 Canada

This equipment meets the applicable Industry Canada Terminal Equipment Technical Specifications. This is confirmed by the registration number. The abbreviation, IC, before the registration number signifies that registration was performed based on a Declaration of Conformity indicating that Industry Canada technical specifications were met.

It does not imply that Industry Canada approved the equipment.

''NOTICE: The Ringer Equivalence Number (REN) for this terminal equipment is 1. The REN assigned to each terminal equipment provides an indication of the maximum number of terminals allowed to be connected to a telephone interface. The termination on an interface may consist of any combination of devices subject only to the requirement that the sum of the Ringer Equivalence Numbers of all the devices does not exceed five.''

11.7.3 China

AVAYA

700433220
February 2007
Copyright© 2007, Avaya Inc. All Rights Reserved

所有在中华人民共和国境内进口或销售的电子信息产品必须附上本文件

Include this document with all Electronic Information Products imported or sold in the People's Republic of China

部件名称 (Part Name)	有毒有害物质或元素 (Hazardous Substance)					
	铅 (Pb)	汞 (Hg)	镉 (Cd)	六价铬 (Cr^{6+})	多溴联苯 (PBB)	多溴二苯醚 (PBDE)
金属部件 (Metal Parts)	×	○	○	○	○	○
电路模块 (Circuit Modules)	×	○	○	○	○	○
电缆及电缆组件 (Cables & Cable Assemblies)	×	○	○	○	○	○
塑料和聚合物部件 (Plastic and Polymeric parts)	○	○	○	○	○	○
电路开关/断路器 (Circuit Switch/Breakers)	○	○	○	○	○	○
电源组件 (Power Assemblies)	×	○	○	○	○	○
显示器 (LCD, Monitor)	○	○	○	○	○	○
玻璃 (Glass)	○	○	○	○	○	○

○： 表示该有毒有害物质在该部件所有均质材料中的含量均在 SJ/T 11363 2006 标准规定的限量要求以下。
Indicates that the concentration of the hazardous substance in all homogeneous materials in the parts is below the relevant threshold of the SJ/T 11363 2006 standard.

×： 表示该有毒有害物质至少在该部件的某一均质材料中的含量超出 SJ/T 11363 2006 标准规定的限量要求。
Indicates that the concentration of the hazardous substance of at least one of all homogeneous materials in the parts is above the relevant threshold of the SJ/T 11363 2006 standard.

本表显示，所附的亚美亚电子信息产品中，从生产日期起，可能包含这些物质。注意：所附产品可能包含或不含以上所列的某些组件。
This table shows where these substances may be found in Avaya's electronic information products, as of the date of manufacture of the enclosed product. Note that some of the component types listed above may or may not be a part of the enclosed product.

除非有另外特别的标注,此标志将作为所附产品及零部件的环保使用期标志. 某些产品会有一个不同的环保使用期(例如,电话机)并贴在其产品上.此环保使用期限只适用于产品在产品手册中所规定的条件下使用

The Environmentally Friendly Use Period (EFUP) for all enclosed products and their parts are per the symbol shown here, unless otherwise marked. Certain products have a different EFUP (for example, telephones) and so are marked to reflect such. The Environmentally Friendly Use Period is valid only when the product is operated under the conditions defined in the product manual.

11.7.4 European Union

1. 999 and 112 calls must not be barred. Doing so will invalidate the approval.
2. All connections at the MDF shall be identifiable by suitable labeling.
3. The CE mark displayed on IP Office equipment indicates the systems compliance with the EMC, LVD, and R&TTE Directives and common technical regulations for Primary Rate and Basic Rate ISDN.
4. All ports for the connection of other non-telecommunications apparatus have a Safety Extra Low Voltage (SELV) safety status.

11.7.5 New Zealand

The grant of a Telepermit for any item of terminal equipment indicates only that Telecom has accepted that the item complies with minimum conditions for connection to its network. It indicates no endorsement of the product by Telecom, nor does it provide any sort of warranty. Above all, it provides no assurance that any item will work correctly in all respects with another item of Telepermitted equipment of a different make or model, nor does it imply that any product is compatible with all of Telecom's network services.

11.7.6 FCC Notification

This equipment complies with Part 68 of the FCC rules and the requirements adopted by the Administrative Council on Terminal Attachments (ACTA). On the rear of this equipment is a label that contains, among other information, a product identifier in the format US:AAAEQ##TXXX. If requested, this number must be provided to the telephone company.

The REN is used to determine the quantity of devices that may be connected to the telephone line. Excessive RENs on the telephone line may result in devices not ringing in response to an incoming call. In most, but not all areas, the sum of RENs should not exceed 5.0. To be certain of the number of devices that may be connected to a line, as determined by the total RENs, contact the local telephone company. For products approved after July 23, 2001, the REN for this product is part of the product identifier that has the format US:AAAEQ##TXXX. The digits represented by ## are the REN without a decimal point (for example, 03 is a REN of 0.3). For earlier products, the REN is separately shown on the label.

Means of Connection

Connection of this equipment to the telephone network is shown in the following table.

Port	FIC	SOC	USOC Jack	REN
IP500 PRI 1U, IP500 PRI2U, IP400 PRI-T1	04DU9.BN, 04DU9.DN, 04DU9.IKN, 04DU9.ISN	6.0Y	RJ48C	NA
IP500 ATM4U IP400 ATM4U	OL13A, OL13B, OL13C, 02AC2, 02LA2, 02LB2, 02LC2, 02LR2, 02LS2	9.0Y	RJ45S	0.1B
IP500 ATM16	OL13A, OL13B, OL13C, 02AC2, 02GS2, 02LA2, 02LB2, 02LC2, 02LR2, 02LF2 02GS2, 02LS2	9.0Y	RJ45S	0.1B

If this equipment causes harm to the telephone network, the telephone company will notify you in advance that temporary discontinuance of service may be required. But if advance notice is not practical, the telephone company will notify the customer as soon as possible. Also, you will be advised of your right to file a complaint with the FCC if you believe it is necessary.

The telephone company may make changes in its facilities, equipment, operations or procedures that could affect the operation of the equipment. If this happens, the telephone company will provide advance notice in order for you to make necessary modifications to maintain uninterrupted service.

If trouble is experienced with this equipment, for repair or warranty information, please contact the Technical Service Center at 1-800-242- 2121 or contact your local Avaya representative. If the equipment is causing harm to the telephone network, the telephone company may request that you disconnect the equipment until the problem is resolved.

A plug and jack used to connect this equipment to the premises wiring and telephone network must comply with the applicable FCC Part 68 rules and requirements adopted by the ACTA.

Connection to party line service is subject to state tariffs. Contact the state public utility commission, public service commission or corporation commission for information.

Equipment With Direct Inward Dialing ("DID"):

Allowing this equipment to be operated in such a manner as to not provide proper answer supervision is a violation of Part 68 of the FCC's rules.

Proper Answer Supervision is when:

A. This equipment returns answer supervision to the public switched telephone network (PSTN) when DID calls are:
   - answered by the called station,
   - answered by the attendant,
   - routed to a recorded announcement that can be administered by the customer premises equipment (CPE) user.
   - Routed to a dial prompt

B. This equipment returns answer supervision signals on all (DID) calls forwarded back to the PSTN. Permissible exceptions are:
   - A call is unanswered.
   - A busy tone is received.
   - A reorder tone is received.

Avaya attests that this registered equipment is capable of providing users access to interstate providers of operator services through the use of access codes. Modification of this equipment by call aggregators to block access dialing codes is a violation of the Telephone Operator Consumers Act of 1990.

Automatic Dialers:

When programming emergency numbers and (or) making test calls to emergency numbers:

1. Remain on the line and briefly explain to the dispatcher the reason for the call.
2. Perform such activities in the off-peak hours, such as early morning or late evenings.

Toll Restriction and Least Cost Routing Equipment:

The software contained in this equipment to allow user access to the network must be upgraded to recognize newly established network area codes and exchange codes as they are placed into service.

Failure to upgrade the premises systems or peripheral equipment to recognize the new codes as they are established will restrict the customer and the customer's employees from gaining access to the network and to these codes.

FCC Part 68 Supplier's Declarations of Conformity

Avaya Inc. in the United States of America hereby certifies that the equipment described in this document and bearing a TIA TSB-168 label identification number complies with the FCC's Rules and Regulations 47 CFR Part 68, and the Administrative Council on Terminal Attachments (ACTA) adopted technical criteria.

Avaya further asserts that Avaya handset-equipped terminal equipment described in this document complies with Paragraph 68.316 of the FCC Rules and Regulations defining Hearing Aid Compatibility and is deemed compatible with hearing aids.

11.7.7 Compliance with FCC Rules

Transmit and Receive Gain Settings for PRI/T1 and Analog Ports

The Gain settings are password controlled for use by qualified installation personnel only and must not be made available to the end user. The default gain settings of 0dB ensures compliance with FCC part 68 section 68.308(b)(5) and TIA/EIA-IS-968 Section 4.5.2.5. "Through transmission amplification from ports for the connection of separately registered equipment or from other network connection ports". Gain setting adjustment by unqualified personnel may result in violation of the FCC rules. Qualified personnel may adjust gain settings above these levels only where:

1. Measurement is made to ensure that the power levels sent to line at each network interface connected does not exceed the maximum levels specified in FCC part 68 section 68.308(b) and TIA/EIA-IS-968 Section 4.5 for that specific interface type.
2. Where gain adjustment away from the default values are made, precautions should be taken to ensure that the connection of terminal equipment is controlled by qualified installation personnel.
3. To conform with the Receive Objective Loudness Rating at distances greater than 2.7km from the central office, on analog trunks a receive gain of 1.5dB must be set.

Index

A

Add-Ons
- 201B Recorder 355
- 4450 Features 356
- EU24 Features 359
- EU24BL Features 360
- Programmable Buttons 356, 359, 360, 363, 365
- T3 DSS Features 363
- XM24 Features 365

Analog
- Phone Barrier Boxes 144
- Phone Region Availability 46, 276
- Port 389, 392
- Trunk Card 27, 253

Application
- Call Center 52, 371
- Call Logging 52
- CD/DVD 52
- ContactStore 370
- CTI 52
- Maintenance 52
- Manager 372
- Monitor 373
- SoftConsole 377
- System Status Application 379
- TAPI 380
- User 52
- Voicemail 52
- VoiceMail Pro 381

Assessments
- Network 49
- VoIP 49

Audio
- Codec Conversion 50
- Port 389

Audio Port 392

Availability of Equipment 11

B

Backup
- SD Card 170

Barrier Boxes
- Analog Phone 144
- Rack Mounting 145

Base Card
- Analog Phone 23, 215
- Digital Station 23, 215
- Legacy Card Carrier 23, 215
- VCM 23, 215

Batteries
- Lithium 428

BRI
- (So) Port 393
- (Trunk) Port 394
- Port 389

C

Cable
- Access Requirements 61
- Clearance Requirements 61

Cables
- Maximum Cable Distances 39, 390
- Standard IP Office 39, 390

Cabling
- Lightening Protection 42, 142

Call Logging Application 52

Call Status
- Application 52

Cards
- Analog Trunk 254, 255
- ATM4 255
- ATM4U 254
- BRI Trunk 255
- E1 PRI 256
- E1R2 PRI 257
- Embedded Voicemail Memory 28, 258
- IP400 Voice Compression Modules 28
- IP500 Analog Phone Base 219
- IP500 Digital Station Base 225
- IP500 Legacy Card Carrier 228
- IP500 VCM 230
- Modem 28
- Small Office Edition Wireless 28
- T1 PRI 256
- VCM 259
- Voice Compression 259

Castle Rock 150

Channels
- Compression 50

Clock 116

Compact Business Center
- Application 52, 371

Compact Contact Center
- Application 52, 371

Compression Channels 50

Conference Center
- Application 52

Configuration
- Create New 82
- Erase 156

Connections
- Grounding 41
- Out of Building 42, 142

ContactStore
- Application 52
- Components 370
- License Requirements 370
- PC Requirements 370

Control Unit
- IP406 V2 18
- IP412 18
- IP500 212
- IP500 System Unit 18
- Rack Mounting 43
- SOE 18
- Wall Mounting 43

Copy
- SD Card 172

Country
- Languages 51
- Supported Locales 51

Create Configuration 82

D

Daughter Cards
- Analog Trunk 26, 233
- BRI Trunk 26, 235
- PRI Trunk 236
- PRI-U Trunk 26
- Trunk 26

DC I/P
- Port 389

DCI I/P Port 395
DECT
Handset 298, 299
Phone 46, 276
Region Availability 46, 276
DevLink Application 52
DS
IROB 143
Phone 46, 143, 276
Port 389, 395
Region Availablility 46, 276
DTE Port 155
Cable requirement 155, 396
RS232 155, 396
Settings 155, 396
Dual PRI
Trunk Card 27, 253
E
Embedded Voicemail
Application 52
Memory Card 28
EMC Cautions
Canadian Department of Communications 431
EMC Caution for China 431
Federal Communications Commission 431
Envirmental Requirements 60
Equipment Availability 11
Expansion
Port 389
Expansion Modules
IP400 Analog Trunk 29
IP400 Analog Trunk 16 262
IP400 Digital Station 29, 266
IP400 Digital Station V2 264
IP400 Phone 29, 270
IP400 Phone V2 268
IP400 So8 29, 272
IP400 WAN3 29
IP500 Analog Trunk 16 239
IP500 BRI So8 241
IP500 Digital Station 29, 243
IP500 Phone 29, 248
IPO 500 Analog Trunk 29
IPO 500 BRI So8 29
Expansion Port 398
EXT O/P
Port 389
EXT O/P Port 146, 398
Extension Numbers
Swapping 135
External Expansion Modules 29
F
Faulty Units 11
FCC Rules 437
Feature Key Server
Application 52
Feature Keys
Parallel 45
Serial 45
Smart Card 45
USB 45
Features
2402D Phone 290
2410D Phone 291
2420 Phone 292
3616 Phone 293
3620 Phone 294
3626 Phone 295
3641 Phone 296, 298
3645 Phone 297
3711 Phone 299
3810 Phone 304
4406D+ Phone 306
4412D+ Phone 307
4424D+ Phone 308
4601 Phone 309
4602IP Phone 310
4602SW Phone 310
4610SW Phone 311
4620IP Phone 312
4620SW Phone 312
4621SW Phone 313
4625SW Phone 314
5202D Phone 315
5220D Phone 317
5410 Phone 316
5601 Phone 318
5602IP Phone 319
5602SW Phone 319
5610SW Phone 320
5620 Phone 321
5621 Phone 322
T3 Classic 351
T3 Comfort 352
T3 Compact 353
Firewall Exceptiong 384
G
General Information
Training Courses 56
Web Sites 56
Grounding Control Units 41
H
H323
Phones 46, 276
Region Availability 46, 276
Hazard Symbols 428
Hazardous Substances 11
Homologation Statement 428
HP OpenView 150
I
IP Office Operation in
Australia 432
Canada 432
China 433
European Union 434
New Zealand 434
USA 435
IP400
Trunk cards 27, 253
Voice Compression Modules card 28
IP500
Analog Phone Base Card 23, 215
Analog Trunk Daughter Card 26
BRI Trunk Daughter Card 26
Control Unit 212
Digital Station Base Card 23, 215
Legacy Card Carrier Base Card 23, 215
PRI-U Trunk Daughter Card 26
Reset Button 154
system 21

IP500
Trunk Daughter Card 26
VCM Base Card 23, 215
IP500 Installation
Admin Applications 69
Card 85, 187
Check Card LED 99
Check CPU LED 194
Connect Manager 71
Documentation 78, 185
Expansion Modules 198
Feature Key 191
Grounding 96, 205
Licences 197
Power 192
Rack Mounting 92, 200
Receive Config 196
Start Manager 72
Tools 77, 184
Unpacking 79, 186
Upgrade Software 195
Wall Mounting 202

L

LAN
Port 389
LAN Port 399
Licences
ContactStore 370
Manager 372
Monitor 373
SoftConsole 377
Syatem Status Application 379
TAPI 380
VoiceMail Pro 381
Licenses
PC-Base 45
PC-Less 45
Lightening Portection 428
Lightening Protection 42, 142
Lithium Batteries 428

M

Maintenance
Applications 52
Manager
Application 52
Clock Quality 116
Components 372
License Requirements 372
PC Requirements 372
Prefix Dialing 118
Trunks 114
Upgrade Software 136
Memory card
Removal 131, 162, 178
Modem Card 28
Module
Polycom Video 148
Modules
Trunk Interface 429
Monitor
Application 52
Components 373
License Requirements 373
PC Requirements 373
Protocols 384
MS-CRM
Application 52

N

Network Assessments 49
New Configuration 82

O

Operating Systems 387
Out of Building
Connections 42, 142

P

Parallel Feature Key 45
PC
Minimum Specifications 387
PC-Base Licensing 45
PC-Less Licensing 45
PF
Port 389
PF Port 400
Phone (POT)
Port 389
Phone (POT) Port 401
Phone 2000 Series
2402D 290
2410D 291
2420 292
Phone 3000 Series
3616 293
3620 294
3626 295
3641 296
3645 297
3701 298
3711 299
3810 304
DECT Handset 298, 299
WiFi 293, 294, 295, 296, 297
Wireless 304
Phone 4000 Series
4406D+ 306
4412D+ 307
4424D+ 308
4601 309
4602IP 310
4602SW 310
4610SW 311
4620 312
4620SW 312
4621SW 313
4625SW 314
Phone 5000 Series
5402D 315
5410 316
5420D 317
5601 318
5602IP 319
5602SW 319
5610SW 320
5620 321
5621 322
Phone T3 Series
Classic 351
Comfort 352
Compact 353
Polycom Video Module 148
Port

Port
Analog 389, 392
Assigned 384
Audio 389, 392
BRI 389
BRI (So) 393
BRI (Trunk) 394
DC I/P 389
DCI I/P 395
Door 146
DS 389, 395
Expansion 389, 398
EXT O/P 146, 389, 398
IP Office 384
LAN 389, 399
PF 389, 400
Phone (POT) 389, 401
PRI 389, 403
RS232/DTE 389
RS323 DTE 155, 396
Safety Classification 430
USB 389
Used 384
WAN 389
Power Supplies
1151C1 36
1151C2 36
Cords 37
Type 40w PSU 36
Type 45W Earthed PSU 36
Type 60W Earthed PSU 36
Uninterrupted Power Supply 38
PRI
Port 389
PRI Port 403
Programmable Buttons 356, 359, 360, 363, 365
Protocols 384

Q

Quad BRI
Trunk Card 27, 253

R

Rack Mounting Control Units 43
Recorder Interface 355
Region Availability
Analog Phone 46, 276
DECT Phone 46, 276
DS Phone 46, 276
H323 Phone 46, 276
Remove
SD Card 131, 162, 178
Requirements
Cable Access 61
Cable Clearance 61
Enviromental 60
Space 61
Wall Mounting 60
Restore
SD Card 171
RoHS 11
RS232/DTE
Port 389

S

Safety Statement 428
SAP Codes
201B Recorder 355
2402D Phone 290
2410D Phone 291
2420D Phone 292
3616 Phone 293
3620 Phone 294
3626 Phone 295
3641 Phone 298
3711 Phone 299
3810 Phone 304
4406D+ Phone 306
4412D+ Phone 307
4424D+ Phone 308
4450 Programmable Buttons 356
4601 Phone 309
4602IP Phone 310
4602SW Phone 310
4610SW Phone 311
4620IP Phone 312
4620SW Phone 312
4621SW Phone 313
4625SW Phone 314
5402D Phone 315
5410 Phone 316
5420D Phone 317
5601 Phone 318
5602IP Phone 319
5602SW Phone 319
5610SW Phone 320
5620 Phone 321
5621 Phone 322
EU24 Programmable Buttons 359
EU24BL Programmable Buttons 360
T3 Classic 351
T3 Comfort 352
T3 Compact 353
T3 DSS Programmable Buttons 363
XM24 Programmable Buttons 365
SD Card
Backup 170
Copy 172
Removal 131, 162, 178
Restore 171
Security Settings
Default 158
Serial Feature Key 45
Server
Minimum Specifications 387
Single E1 PRI
Trunk Card 27, 253
Single E1R2
Trunk Card 27, 253
Single PRI T1
Trunk Card 27, 253
Small Office Edition
Wireless Card 28
Smart card Feature Key 45
SNMP 150
Enabling 153
Installation 151
Port 153
respond 153
Trap Sending 153
SNMP MIBs
Application 52
So8
Example ISDN Terminal 147

So8
Example Video Conference 148
SoftConsole
Application 52
Components 377
License Requirements 377
PC Requirements 377
Software
Erase Core Software 159
Space Requirements 61
Statement
Homologation 428
Safety 428
Supported
Language 51
Locales 51
System Status
Application 52
System Status Application
Components 379
License Requirements 379
PC Requirements 379

T

TAPI
Components 380
License Requirements 380
PC Requirements 380
WAV Driver Application 52
TAPILink Lite
Application 52
TAPIlink Pro Application 52
Training Courses 56
Trunk Interface Modules 429

U

USB
Feature Key 45
Port 389

V

Voice Compression Channels 50
Voicemail Lite
Application 52
VoiceMail Pro
Application 52
Components 381
License Requirements 381
PC Requirements 381
VoIP Assessments 49

W

Wall Mounting Control Units 43
Wall Mounting Requirements 60
WAN
Port 27, 253, 389
Waterproof Phone 294
Web Sites 56
WiFi Phone 293, 294, 295, 296, 297
Wireless Phone 304

Performance figures and data quoted in this document are typical, and must be specifically confirmed in writing by Avaya before they become applicable to any particular order or contract. The company reserves the right to make alterations or amendments to the detailed specifications at its discretion. The publication of information in this document does not imply freedom from patent or other protective rights of Avaya or others.

All trademarks identified by the ® or ™ are registered trademarks or trademarks, respectively, of Avaya Inc. All other trademarks are the property of their respective owners.

This document contains proprietary information of Avaya and is not to be disclosed or used except in accordance with applicable agreements.

© 2013 Avaya Inc. All rights reserved.